Table of Content 2194100

1. User manual 2
2. Legal regulations 2
3. Safety instructions 3
4. Application 4
5. Functional principle 5
6. Technical data 6
7. Performance graph 7
8. Mounting 8
9. Mounting Principle 9
10. Cut out dimensions 10
11. Electrical connection 11
12. Wiring diagram 12
13. Taking into operation 13
14. Trouble shooting 14
15. Maintenance & Cleaning 15
16. Transport & Storage 15
17. Parts supplied / Spare parts / Accessories 16

1. User manual

This instruction manual contains information and instructions to enable the user to work safely, correctly and economically on the unit. Understanding and adhering to the manual can help one:

- Avoid any dangers.
- Reduce repair costs and stoppages.
- Extend and improve the reliability and working life of the unit.

PLEASE ENSURE TO USE THE RIGHT VERSION OF THE INSTRUCTION MANUAL SUITABLE FOR YOUR UNIT.

Intended use
The unit is to be used exclusively for the dissipation of heat from control cabinets and enclosures in order to protect temperature sensitive components in an industrial enviorment. To meet the conditions of use, all the information and instructions in the instruction manual must be adhered to.

General danger
Indicates compulsory safety regulations which are not covered by a specific pictogram such as one of the following.

High electric voltage
Indicates electric shock danger.

Important safety instruction
Indicates instructions for safe maintenance and operation of the unit.

Attention
Indicates possible burns from hot components.

Attention
Indicates possible damage to the unit.

Instruction
Indicates possible danger to the environment.

2. Legal regulations

Liability
The information, data and instructions contained in this instruction manual are current at the time of going to press. We reserve the right to make technical changes to the unit in the course of its development. Therefore, no claims can be accepted for previously delivered units based on the information, diagrams or descriptions contained in this manual. No liability can be accepted for damage and production caused by:

- Disregarding the instruction manual
- Operating error
- Inappropriate work on or with the unit
- The use of non-specified spare parts and accessories
- Unauthorised modifications or changes to the unit by the user or his personnel

The supplier is only liable for errors and omissions as outlined in the guarantee conditions contained in the main contractual agreement. Claims for damages on any grounds are excluded.

3. Safety instructions

Upon delivery the unit is already meeting current technical standards and can therefore be safely taken into operation. Only authorised personnel is allowed to work on the unit. Unauthorised personnel must be prohibited from working on the unit. Operating personnel must inform their superiors immediately of any malfunction of the unit.
Please note that before starting to work on or with the unit, a procedure must be carried out inside the cabinet on which the unit is to be mounted.
Before commencing work inside the cabinet, the control cabinet manufacturer's instruction must be read with regards to:

- Safety instructions.
- Instructions on taking the cabinet out of operation.
- Instructions on the prevention of unauthorised cabinet reconnection.

The electric equipment meets the valid safety regulations. One can find dangerous voltages (above 50 V AC or above 100 V DC)

- Behind the control cabinet doors.
- On the power supply in the unit housing.

The unit has to be operated according to the type plate and the wiring diagram, and must be protected externally from overloading and electrical faults via suitable protective devices.

Danger through incorrect work on the unit
The unit can only be installed and maintained by technical competent and qualified personnel, using only supplied material according to the supplied instructions.

Danger from electrical voltage
Only specialised personnel are allowed to maintain and clean the unit. The personnel must ensure that for the duration of the maintenance and cleaning, the unit is disconnected from the electrical supply.

Attention
Damage to the unit through the use of inappropriate cleaning materials. Please do not use aggressive cleaning material.

Instruction
Damage to the environment through unauthorised disposal. All spare parts and associated material must be disposed according to the environmental laws.

4. Application

Air - water heat exchangers are intended as complementary accessories to large industrial equipment which include a motor-operated fan or blower together with a cooling heat exchanger. These may also include an electric heater. The fan or blower is intended to recirculate air and allow heat exchange. The heat exchanger is designed for chilled water or anti-freeze/corrosion inhibitor mixed water from a separate source.
The cooling function may be controlled by an on-board or remote controller or thermostat, a thermostatically controlled valve or an electrically controlled valve. Heating function, when installed is provided by an electrical heating element. The unit seals the cabinet which ensures that the clean air inside does not come into contact with the ambient air which may well be dirty or polluted. The unit is fit for purpose within the rated/declared ambient conditions (e.g. dusty and oily air or high air temperatures between 34°F and 162°F), also indicating the rated allowable ingress and environment.

Water quality
To ensure the maximum lifetime of an air-water heat exchangers, it is important to supply cooling water in conformity with the VGB Cooling Water Guidelines (VGB-R 455 P). The cooling water used must be soft enough to avoid scale deposits, but should not be too soft as this would corrode the heat exchanger. Where the cooling water is cooled for reuse, part of the water has to be changed with fresh water to prevent the concentration of hardness and salt content which makes the water more corrosive.
The main impurities and possible methods of eliminating them are given in the table below:

Pollution of the water	Method of elimination
Mechanical impurities (dp > 0.079in)	Filtration of the water
Excessive hardness	Softening of the water by ion exchange
Moderate content of mechanical impurities and hardness formers	Addition of dispersants or stabilisers
Moderate content of chemical impurities	Addition of passivators and inhibitors
Biological impurities (bacteria and algae)	Addition of biocides

When the water is re-cooled, it is recommended that the water condition is maintained as close as possible to the following list of hydrological data:

Hydrological data		
pH-values	7 - 8.5	
Carbonate hardness	>3 <8	°dH
Free carbon dioxide	0.4673 - 0.8763	gr/gal
Associated carbon dioxide	0.4673 - 0.8763	gr/gal
Aggressive carbon dioxide	0	gr/gal
Sulphides	free	gr/gal
Oxygen	< 0.5842	gr/gal
Chloride ions	< 2.921	gr/gal
Sulphate ions	< 14.6	gr/gal
Nitrates and nitrites	< 0.5842	gr/gal
COB	< 0.4089	gr/gal
Ammonia	< 0.2921	gr/gal
Iron	< 0.01168	gr/gal
Manganese	< 0.01168	gr/gal
Conductivity	< 2200	µS/cm
Solid residue from evaporation	< 29.21	gr/gal
Potassium manganate consumption	< 1.46	gr/gal
Suspended matter	< 0.1753	gr/gal
(part flow cleaning recommended)	> 0.1753 < 0.8763	gr/gal
(continuous cleaning)	> 0.8763	gr/gal

5. Functional principle

The air inside the control cabinet is moved over a laminar heat exchanger through which a coolant medium runs, making use of the counter-flow principle. The fan blows the warm air along the aluminium fins of the heat exchanger; it cools down and is then returned into the cabinet. The heat exchanger fan runs constantly, providing continuous circulation of the air in the cabinet. This circulation prevents hot spots within the control cabinet. During this process, the coolant heats up and is returned to the coolant supply system at an increased temperature.
In order to save operating costs, and in the interests of environmental protection, the water temperature can be reduced by re-cooling systems or cold water sets so that it can be reused in the heat exchanger. This process involves the water circulating in a closed circuit.

1. Air intake cabinet side
2. Radial fan cabinet side
3. Heat exchanger
4. Air outlet cabinet side
5. Water in
6. Water out

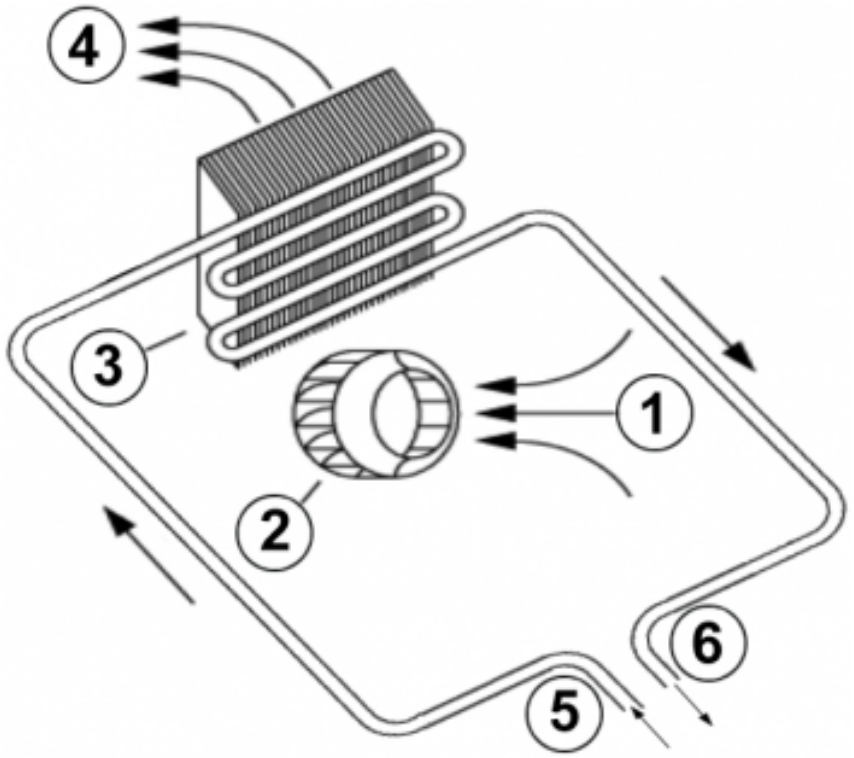

6. Technical data

Order Number	2194100
Cooling capacity 95F/W50F (53 GPH)	6820 BTU
Cooling capacity 95F/W50F (132 GPH)	8020 BTU
Refrigerant / GWP	Water, light oils or similar
Operating temperature range	+34°F - +162°F
Air volume flow (system / unimpeded)	217 / 241 cfm
Mounting	19" rack
Housing Material	Mild steel, powder coated
Dimension H x W x D	6.89 x 17.44 x 19.88 in.
Weight	36.38 lbs
Voltage / Frequency	90 - 265 V ~ 50/60 Hz
Starting current	2.5 A
Max. current	0.6 A
Max. power	150 W
Pressure water circuit	10 bar
Water connection	Rp 1/4" - inside thread with 2 connectors for pipe internal diameter of 0.39 in.
Fuse	4 A (T)
Short-circuit current rating	5 kA
Connection	Plug
Ingress protection	NEMA 12
Approvals	CE

7. Performance graph

Δ T = Temperature difference between air intake and cooling
P = Cooling capacity

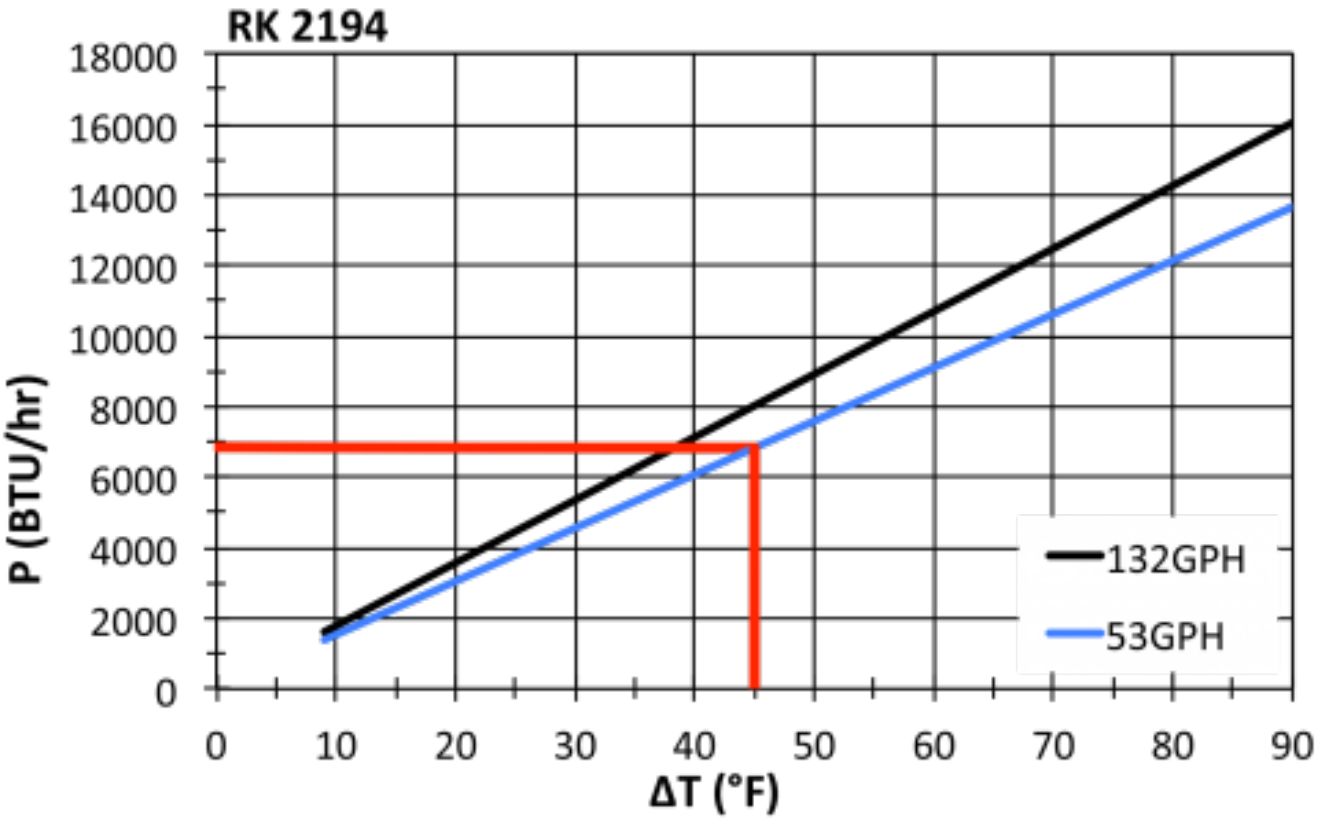

8. Mounting

The power supply rating on unit rating plate must comply with mains rating.

Always disconnect the power supply before opening the unit.

The heat load to be dissipated from enclosure should not exceed specific cooling output of the unit at any condition. At cooling unit selection always cater for a safety margin of at least 15% extra cooling output in the worst conditions.

Ensure that flows of air leaving and entering the cooling unit, internal and external, are not obstructed. It must also be ensured in accordance with UL, that the air outlet is not blowing air directly at an equipment operator. Should this be the case a barrier or duct shall be provided to redirect the airflow.

Before drilling the enclosure ensure the fixing elements and couplings will not interfere with the equipment inside the enclosure itself. Disconnect power before starting any work inside the enclosure. Following this 1:1 Scale Drilling Template drill the holes and make the required cuts on the enclosure. This template may have been affected by storage conditions, please check this template by verifying values of the largest dimensions before drilling. Fit the sealing strip on the cooling unit on the side connected to the enclosure and follow the installation diagram.

Note: In case of 19" rack mounted units please ignore the above mounting instructions.

9. Mounting Principle

1 Bolt
2 Washer

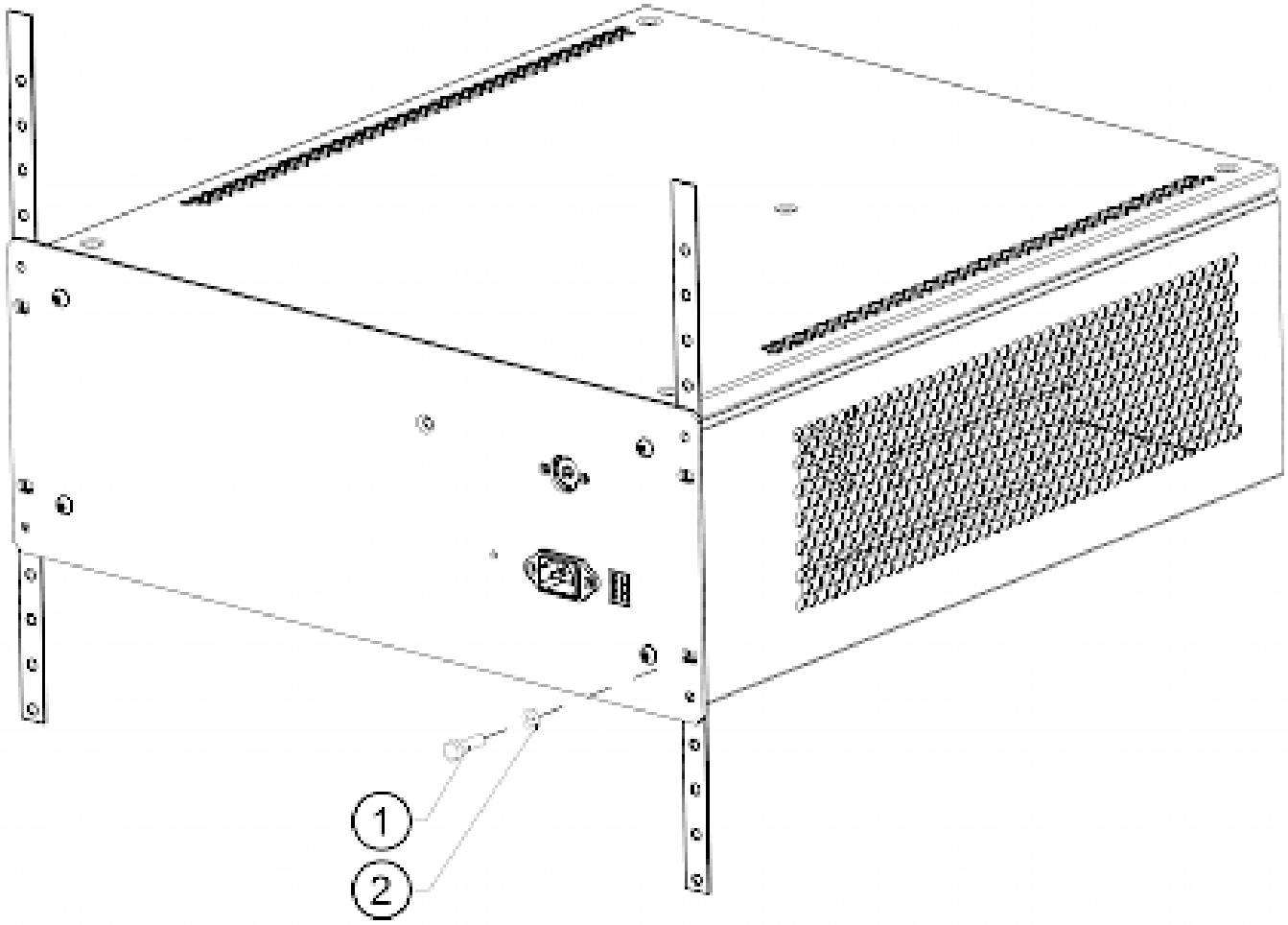

10. Cut out dimensions

11. Electrical connection

High electric voltage present. Installation, maintenance, cleaning and any other work must be carried out by qualified personnel only. The personnel must ensure that for the duration of this work the unit and the cabinet are disconnected from the electrical supply and protected against unauthorised/accidental reconnection.

Connection to the main electrical supply
The mains connection is made via a plug. To connect the unit to the mains proceed as follows:

- Take the control cabinet out of operation in the prescribed manner.
- See the connection details on the circuit diagram.
- Note the connections on the connector / terminal block from the following table

Terminal	
L1	Live (black)
N	Neutral (blue)
PE	Protection- Earth (green / yellow)
T1	Alarm contact (red)
T2	Alarm contact (pink)
P1	Alarm contact (brown)
P2	Alarm contact (grey)

Ensure that the correct polarity is maintained. The fans should have clockwise rotation.

- Connect the unit to the mains.
- Take the control cabinet back into operation in the prescribed manner.
- Power consumption and start-up current are stated on the data label and under technical data.

12. Wiring diagram

M1	Radial fan
M2	Radial fan
P1	Power supply
X1	4 way conncetor
X2	7-pole alarm connector
T1/T2	Alarm Dual Thermostat (NCNO), setting range -10°C - 80°C

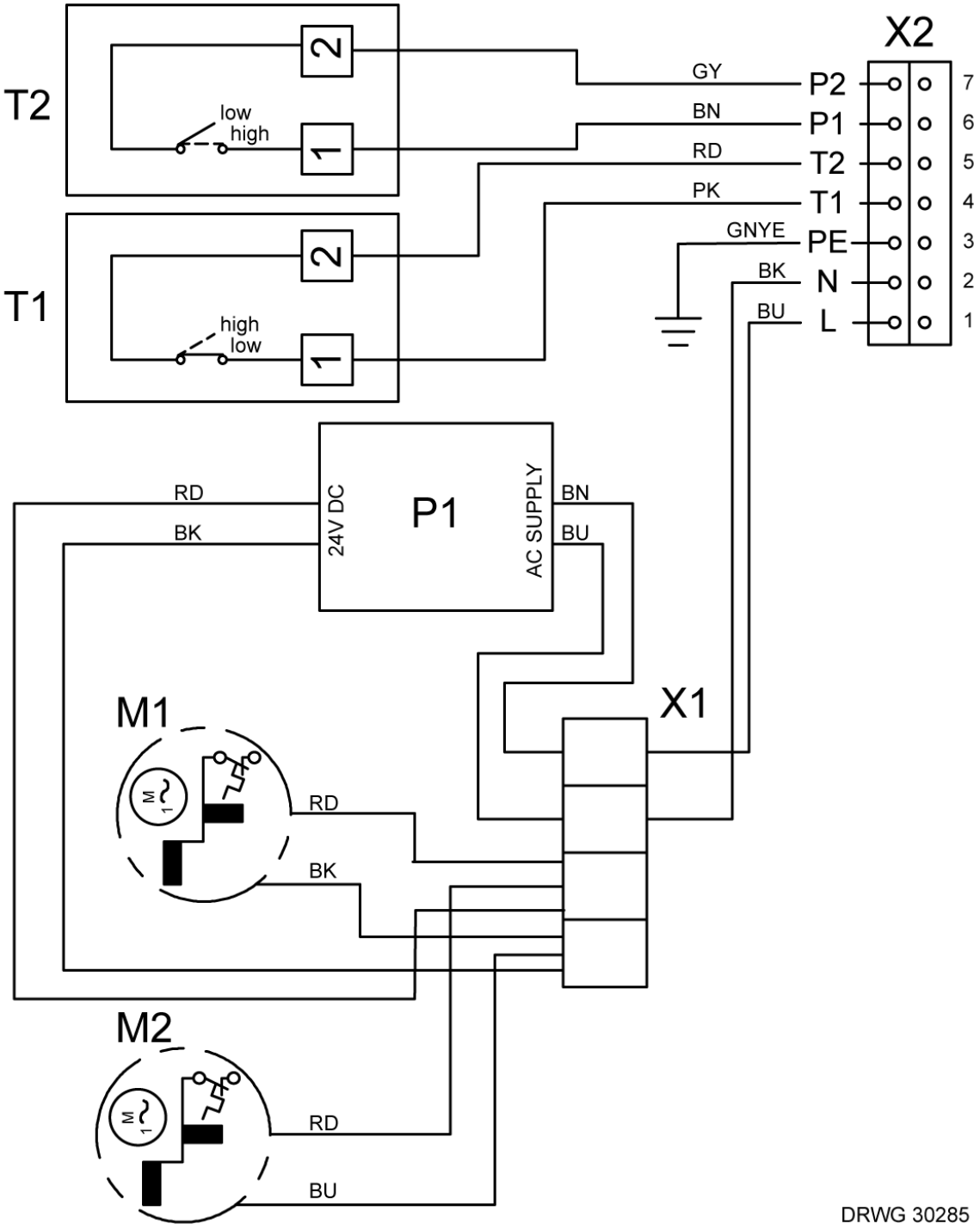

13. Taking into operation

Attention! The unit can be damaged by lack of lubricant. To ensure that the compressor is adequately lubricated the oil, which has been displaced during transport, must be allowed to flow back into it. The unit must therefore be allowed to stand for at least 30 min. before being connected to the mains and taken into operation.
Compressor based cooling units / system must be protected with a MCB Type D or K.
Upon connection the internal fan will start working. If the temperature inside the enclosure is higher than the set value of the controller both the compressor and external air fan start working. Once the air inside the enclosure reaches the set temperature the compressor and external fan will stop. The unit is pre-set at 95°F, which is suitable for most of the electronic devices.

14. Trouble shooting

Failure	Condition	Cause	Solution
Unit does not cool	Internal fan does not work	Power not connected.	Verify power supply
	Internal fan works, external fan and compressor don't work	Enclosure temperature is below setting temperature (St)	Verify values of parameter "St"
		Door switch contact is open	Verify door switch
		Controller doesn't work	Replace controller
	Internal fan works, external fan and compressor don't work Display shows alternating "OFF" and temperature	The sequence of the phases inside the power supply connector is incorrect	Change phases inside power supply connector
Unit does not cool	External and internal fan work, compressor does not work	Compressor motor electrical failure	Verify external fan, verify ambient temperature, clean condenser
		Capacitor for compressor failed	Replace capacitor
	Compressor works, external fan doesn't work	External fan needs to be replaced	Replace external fan
Enclosure over heating	Compressor and fans (external and internal) work all the time	Unit cooling undersized	Enclosure needs a bigger cooling unit
	Enclosure needs a bigger cooling unit	Thermal compressor protector triggered	Verify ambient temperature, clean condenser
		Refrigerant leakage	Contact dealer/service center
Excessive condensate	Door enclosure open	Ambient air gets into the enclosure	Ensure door is closed, add a door switch and connect it to controller
	Door enclosure closed	Enclosure IP degree minimum IP54	Seal openings on enclosure
		Damaged misplaced sealing strip	Repair strip accordingly

15. Maintenance & Cleaning

Always switch power supply off before starting any maintenance on the unit.

The cooling unit is generally maintenance free and can be operated without filters in most environments. For units with filters these should be checked, cleaned and if necessary replaced on a regular basis. In addition the unit should have regular functional tests (approx. every 2,000 hours depending on the grade of ambient pollution).

Disposal
The cooling unit contains R134a refrigerant and small quantities of lubricating oil. Replacement, repairs and final disposal must be done according to the regulations of each country for these substances.

16. Transport & Storage

Malfunction due to transport damage
On delivery the carton box containing the unit must be examined for signs of transport damage. Any transport damage to the carton box could indicate that the unit itself has been damaged in transit which in the worst case could mean that the unit will not function.
The unit can only be stored in locations which meet the following conditions:

- temperature range: - 40°F to 158°F
- Relative humidity (at 77°F): max. 95 %

Returning the unit
To avoid transport damage the unit should be returned in the original packing or in a packing case and must be strapped to a pallet. If the unit cannot be returned in the original packing please ensure that:

- A space of at least 30 mm. must be maintained at all points between the unit and the external packing.
- The unit must be shipped in the same position as it was mounted.
- The unit must be protected by shock resistant padding (hard foam corner pieces, strips or cardboard corner pieces).

17. Parts supplied / Spare parts / Accessories

Description	QTY	Image
Instruction manual	1	
CE Declaration	1	
4U handle kit	1	
Cable tie	1	
Drain pipe	1	
Hose clip 10 - 16 mm	1	
Quick connect brass plug	1	
Quick connect brass coupling	1	

Seifert Systems GmbH
Albert-Einstein-Str. 3

42477 Radevormwald
Germany
Tel.+49 2195 68994-0
info.de@seifertsystems.com

Seifert Systems Ltd.
HF09/10
Hal-Far Industrial Estate
Birzebbuga, BBG 3000
Malta
Tel.+356 2220 7000
info@seifertsystems.com

Seifert Systems AG
Wilerstrasse 16

4563 Gerlafingen
Switzerland
Tel.+41 32 675 35 51
info.ch@seifertsystems.com

Seifert Systems GmbH
Bärnthal 1

4901 Ottnang
Austria
Tel.+43 7676 20712 0
info.at@seifertsystem.com

Seifert Systems Ltd.
Rep. Office

26100 Cremona
Italy
Tel.+39 349 259 4524
info@seifertsystems.com

Seifert Systems Inc.
75 Circuit Drive
North Kingstown
RI 02852
USA
Tel.+1 401-294-6960
info.us@seifertsystems.com

Seifert Systems Pty Ltd.
105 Lewis Road
Wantirna South
3152 Victoria
Australia
Tel.+61 3 98 01 19 06
info@seifertsystems.com.au