Table of Content 850610S62

1. User manual 2
2. Legal regulations 3
3. Safety instructions 4
4. Application 5
5. Functional principle 6
6. Technical data 7
7. Performance graph 8
8. Mounting 9
9. Condensate management 13
10. Mounting Principle 14
11. Cut Out Dimension 15
12. Electrical Connection 16
13. Controller 17
14. Wiring Diagram 24
15. Taking into Operation 26
16. Trouble Shooting 27
17. Maintenance & Cleaning 27
18. Transport & Storage 29
19. Parts supplied / Spare parts / Accessories 30

1. User manual

This instruction manual contains information and instructions to enable the user to work safely, correctly and economically on the unit. Understanding and adhering to the manual can help one:

- Avoid any dangers.
- Reduce repair costs and stoppages.
- Extend and improve the reliability and working life of the unit.

PLEASE ENSURE TO USE THE RIGHT VERSION OF THE INSTRUCTION MANUAL SUITABLE FOR YOUR UNIT.

Intended use
The unit is to be used exclusively for the dissipation of heat from control cabinets and enclosures (stationary, not moving) in order to protect temperature sensitive components in an industrial environment. To meet the conditions of use, all the information and instructions in the instruction manual must be adhered to.

General danger
Indicates compulsory safety regulations which are not covered by a specific pictogram such as one of the following.

High electric voltage
Indicates electric shock danger.

Important safety instruction
Indicates instructions for safe maintenance and operation of the unit.

Attention
Indicates possible burns from hot components.

Attention
Indicates possible damage to the unit.

Instruction
Indicates possible danger to the environment.

2. Legal regulations

Liability
The information, data and instructions contained in this instruction manual are current at the time of going to press. We reserve the right to make technical changes to the unit in the course of its development. Therefore, no claims can be accepted for previously delivered units based on the information, diagrams or descriptions contained in this manual. No liability can be accepted for damage and production caused by:

- Disregarding the instruction manual
- Operating error
- Inappropriate work on or with the unit
- The use of non-specified spare parts and accessories
- Unauthorised modifications or changes to the unit by the user or his personnel

The supplier is only liable for errors and omissions as outlined in the guarantee conditions contained in the main contractual agreement. Claims for damages on any grounds are excluded.

3. Safety instructions

Upon delivery the unit is already meeting current technical standards and can therefore be safely taken into operation. Only authorised personnel is allowed to work on the unit. Unauthorised personnel must be prohibited from working on the unit. Operating personnel must inform their superiors immediately of any malfunction of the unit.
Please note that before starting to work on or with the unit, a procedure must be carried out inside the cabinet on which the unit is to be mounted.
Before commencing work inside the cabinet, the control cabinet manufacturer's instruction must be read with regards to:

- Safety instructions.
- Instructions on taking the cabinet out of operation.
- Instructions on the prevention of unauthorised cabinet reconnection.

The electric equipment meets the valid safety regulations. One can find dangerous voltages (above 50 V AC or above 100 V DC)

- Behind the control cabinet doors.
- On the power supply in the unit housing.

The unit has to be operated according to the type plate and the wiring diagram, and must be protected externally from overloading and electrical faults via suitable protective devices.

Danger through incorrect work on the unit
The unit can only be installed and maintained by technical competent and qualified personnel, using only supplied material according to the supplied instructions.

Danger from electrical voltage
Only specialised personnel are allowed to maintain and clean the unit. The personnel must ensure that for the duration of the maintenance and cleaning, the unit is disconnected from the electrical supply.

Attention
Damage to the unit through the use of inappropriate cleaning materials. Please do not use aggressive cleaning material.

Instruction
Damage to the environment through unauthorised disposal. All spare parts and associated material must be disposed according to the environmental laws.

4. Application

The cooling unit is intended to be used as a complementary accessory to larger industrial equipment. The unit is used where heat needs to be dissipated from electrical control cabinets or similar enclosures in order to protect heat sensitive components. *It is not intended for household use*.
The unit has two completely separate air circuits which ensure that the clean cabinet air does not come into contact with the ambient air which may well be dirty or polluted.

Enclosure cooling units can dissipate large quantities of heat from sealed enclosures such as electrical enclosures into the ambient air and at the same time reduce the cabinet internal temperature to below that of the ambient air.
The unit can function without problems in extreme ambient conditions (e.g. dusty and oily air) with a standard operating temperature ranging between +10°C (50°F) and +60°C (131°F). Units can be ordered with an additional electrical cabinet heater. For the cooling capacities and environmental ratings please refer to the type plate data.

5. Functional principle

The cooling unit for enclosures works on the basis of a refrigeration circuit consisting of four main components: compressor, evaporator, condenser and expansion device.
The circuit is hermetically sealed and R134a refrigerant circulates inside it (R134a is chlorine free and has an Ozone Destruction Potential [ODP] of 0 and a Global Warming Potential [GWP] of 1430). The compressor compresses the refrigerant (thus taking it to high pressure and high temperature), and pushes it through the condenser, where it is cooled by ambient air thus passing from the gas to the liquid state. At the liquid state it then passes through the capillary pipe being a much lower pressure the refrigerant arrives to the evaporator where it absorbs the necessary heat to change from liquid to gas state. The gas is then drawn back into the compressor completing the cycle.

1	Air intake cabinet side	6	Air intake ambient side
2	Radial fan cabinet side	7	Air intake ambient side
3	Evaporator	8	Condenser
4	Air outlet cabinet side	9	Air outlet ambient side
5	Compressor	10	Filter dryer
		11	Expansion device

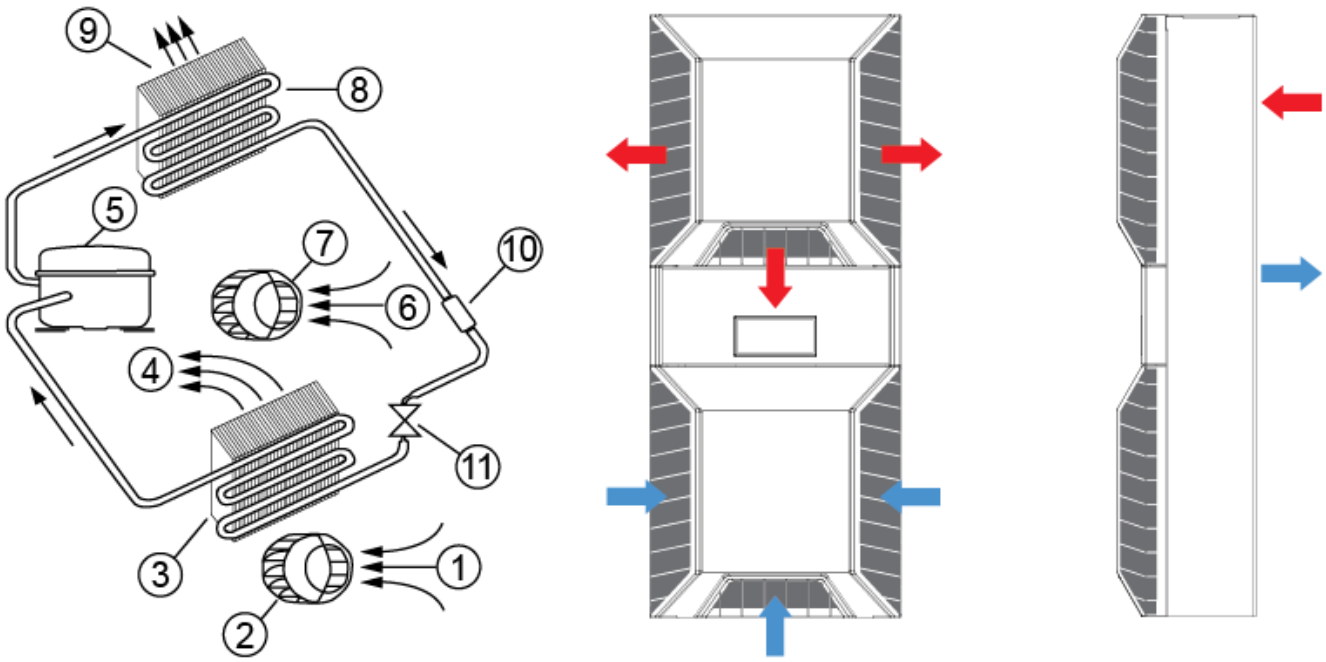

6. Technical data

Order Number	850610S62
Cooling capacity L35L35 (EN14511-3)	670 W @ 50 Hz 680 W @ 60 Hz
Cooling capacity L35L50 (EN14511-3)	510 W @ 50 Hz 535 W @ 60 Hz
EER L35L35	1.55
Compressor type	Rotary piston
Refrigerant / GWP	R134a / 1430
Refrigerant charge	125 g / 4.4 oz
High / low Pressure	28 / 6 bar 406 / 88 psi
Operating Temperature Range	10°C - 60°C
UL temperature range	10°C - 55°C
Air flow volume (system / unimpeded)	Ambient air circuit: 200 / 408 m³/h Cabinet air circuit: 122 / 180 m³/h
Mounting	Wall mounted / recessed
Housing Material	Stainless steel AISI 304 (V2A)
Dimensions A x B x C (D+E)	600 x 250 x 135 (45+90) mm
Weight	14 kg
Voltage / Frequency	120 V ~ 50/60 Hz
UL Voltage / Frequency	120 V ~ 60 Hz
Current L35L35	5.6 A @ 50 Hz 4.1 A @ 60 Hz
Starting current	13 A
Max. current	6.0 A
Nominal power L35L35	515 W @ 50 Hz 455 W @ 60 Hz
Max. power	620 W
Fuse	15 A (T)
Max circuit ampacity	15 A
Short-circuit current rating	5 kA
Rated current compressor	3.7 A
Full load current fans	0.4 A
Connection	4 pole terminal block for power 5 pole terminal block for signals 3 pole terminal block for RS 485
Ingress Protection	IP 56 / Type 12, 3, 3R, 4, 4X
Approvals	CE, cURus, cULus

7. Performance graph

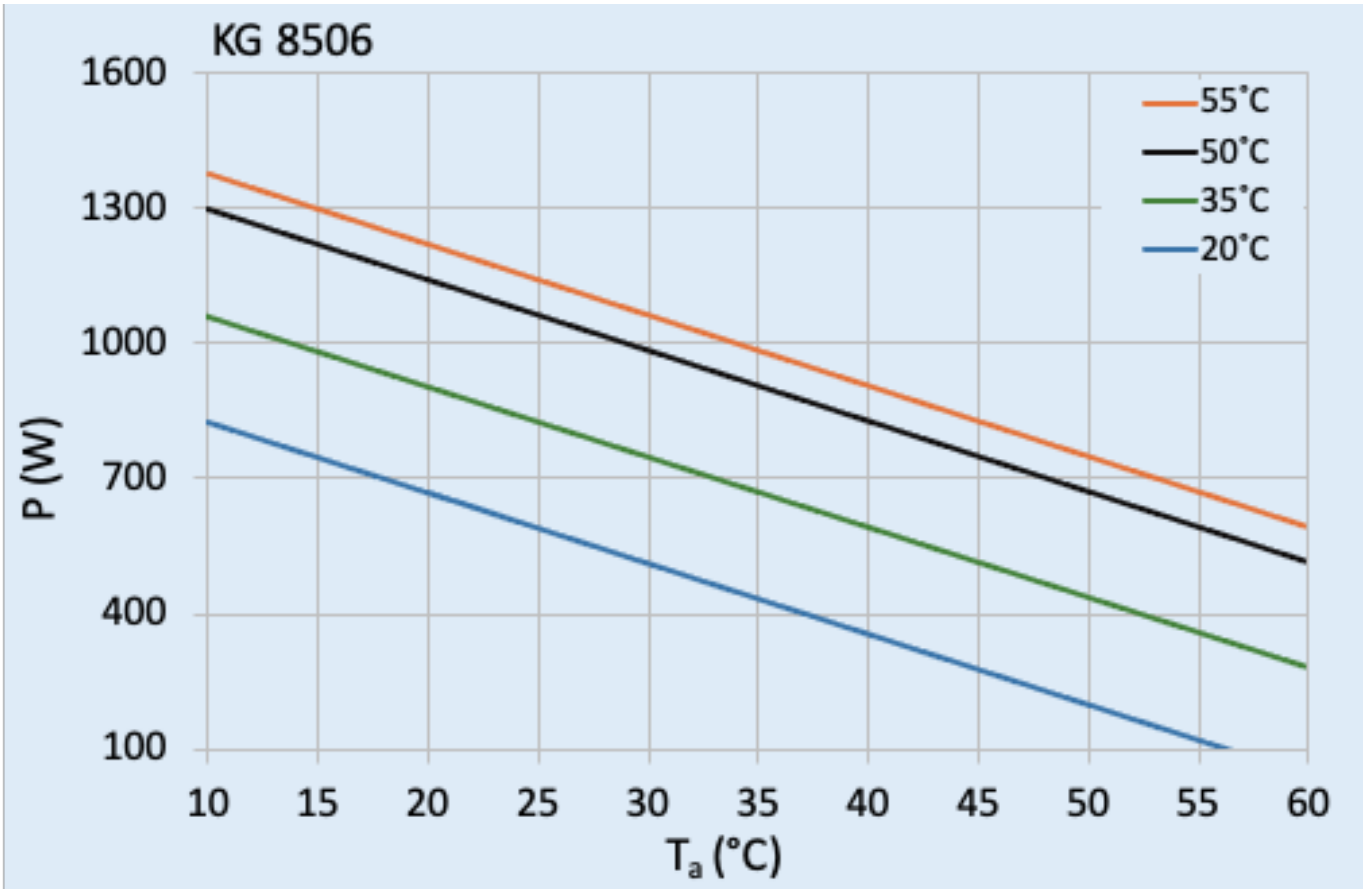

8. Mounting

Unpacking unit:

Please follow the below steps to unpack the unit.

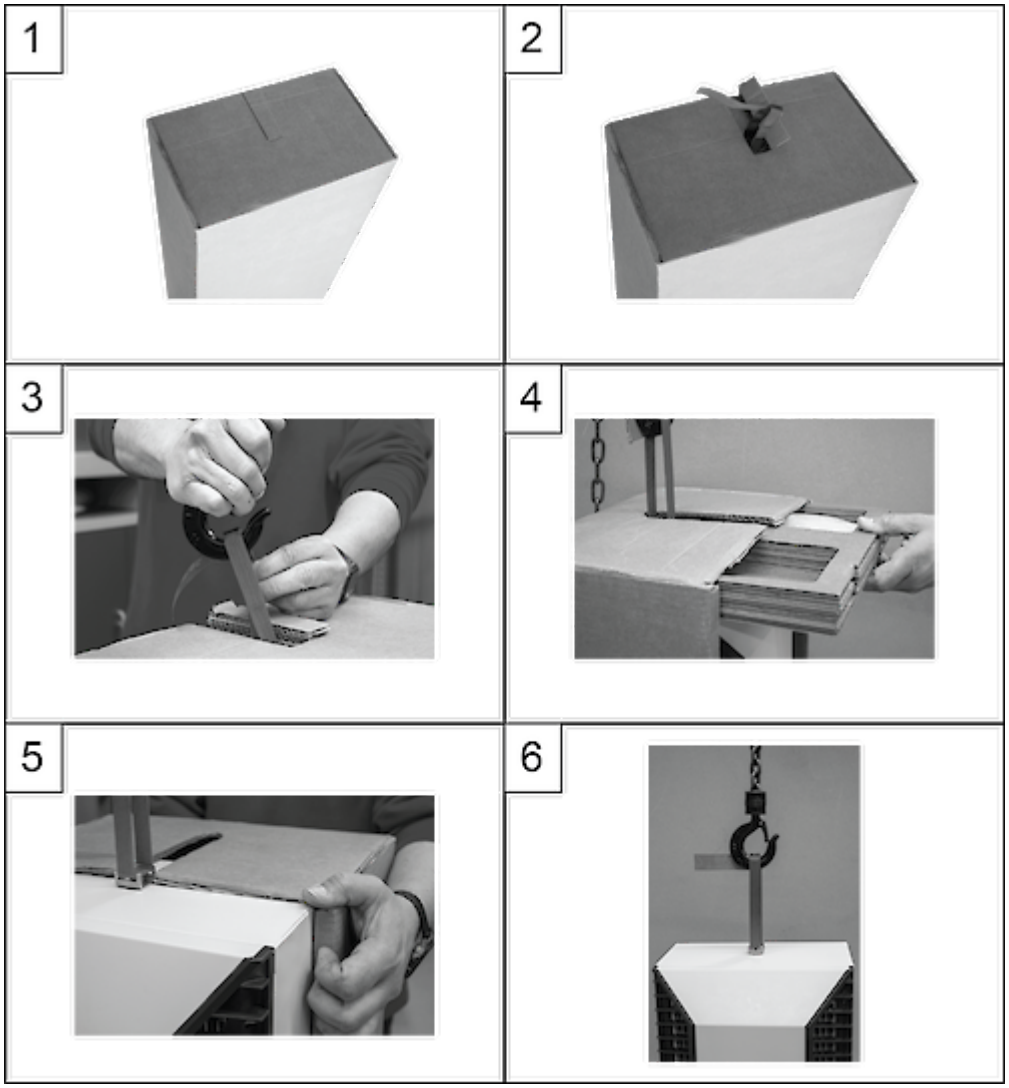

STEP 1:
Stand the cooling unit upright with the pre-cut packaging opening facing up.

STEP 2:
Pull off the packaging opening.

STEP 3:
Hang the transport loop of the unit in the transport hook and lift it slightly.

STEP 4:
Pull off the packaging and slide out the tray with installation material and the short version of the operating manual.

STEP 5:
Pull off the remaining packaging.

STEP 6:
The cooling unit can now be attached to the enclosure.

Mounting:

The power supply rating on unit rating plate must comply with mains rating.

Always disconnect the power supply before opening the unit.

The heat load to be dissipated from enclosure should not exceed specific cooling output of the unit at any condition. At cooling unit selection always cater for a safety margin of at least 15% extra cooling output in the worst conditions.

Air inlets and outlets must be completely free from obstruction. Ensure that flows of air leaving and entering the cooling unit, internal and external, are not obstructed. It must also be ensured in accordance with UL, that the air outlet is not blowing air directly at an equipment operator. Should this be the case a barrier or duct shall be provided to redirect the airflow.

Cooling unit enclosure air suction hole must be installed in the highest possible point.

When installing the unit on a door ensure it can take the weight. Before drilling the enclosure ensure the fixing elements and couplings will not interfere with the equipment inside the enclosure itself. Disconnect power before starting any work inside the enclosure.

If the unit is mounted in a recessed position, the controller bracket can be pulled according to the wall thickness of the enclosure outwards as per steps below.

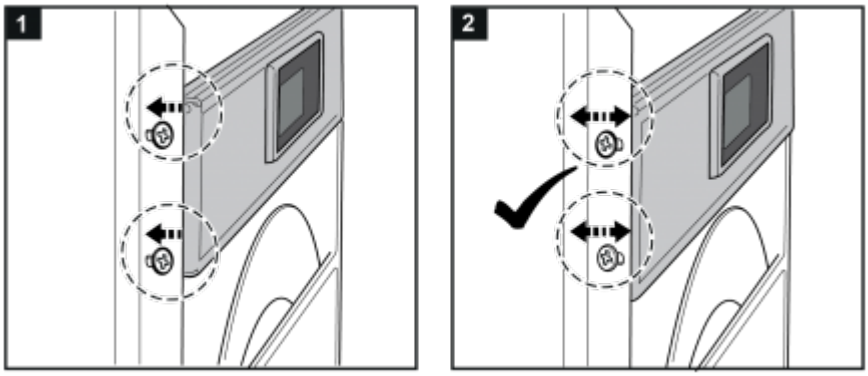

.

Cold air outlet duct:
When using a cold air outlet duct please follow the steps below.

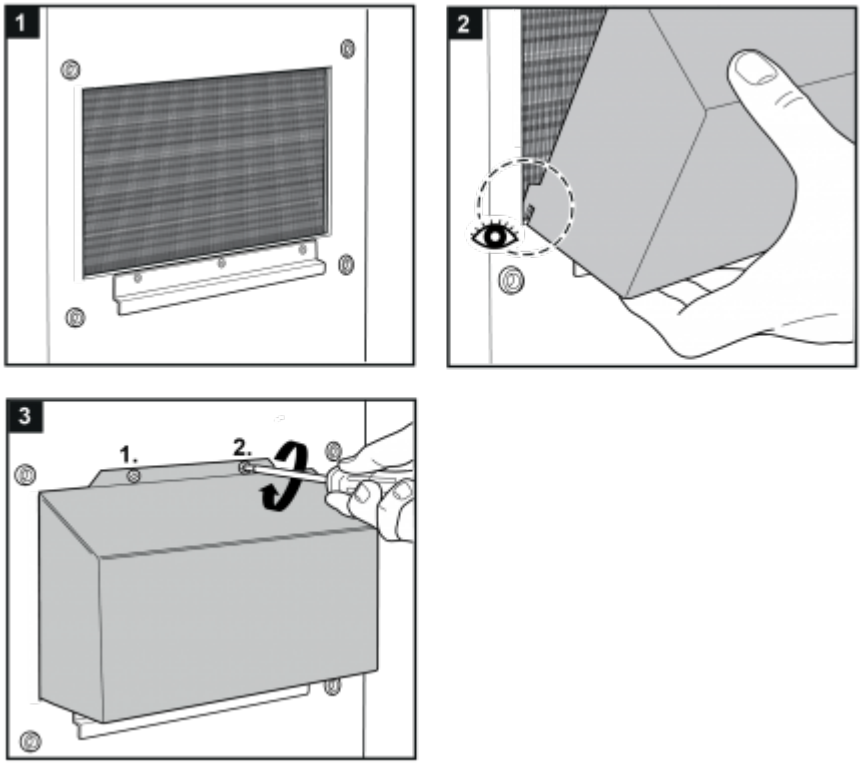

Filter installation: If you install / replace a filter please follow the steps below.

Loosen (do not completely unscrew) the 4 screws on the lower part of the front cover. Remove the bottom cover. Then proceed as shown. Once the aluminum filter is installed, reattach the cover.

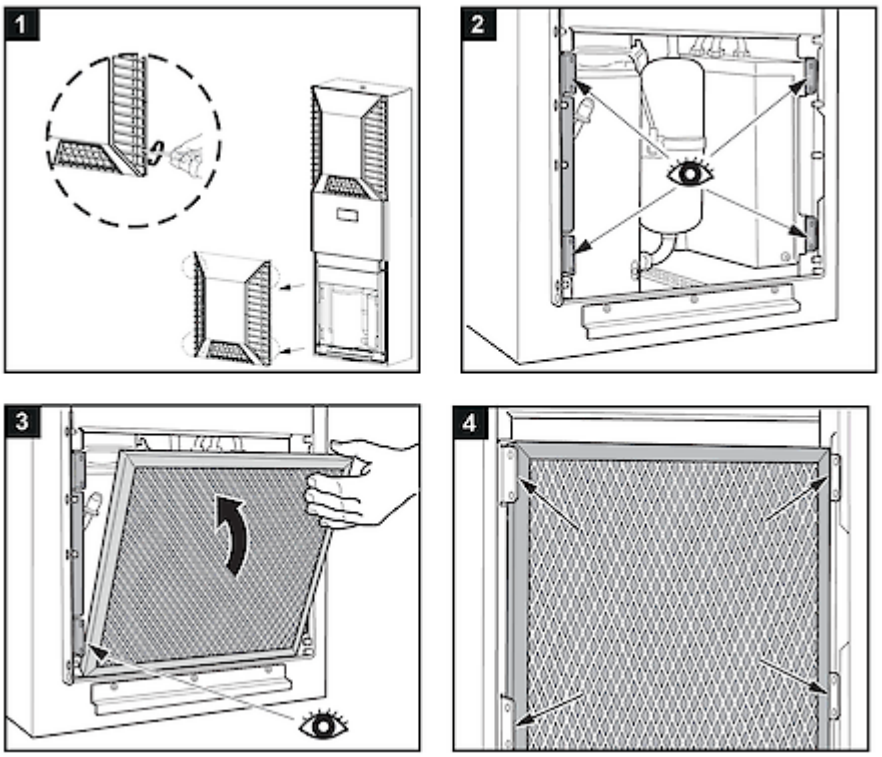

Applying supplied tight tape

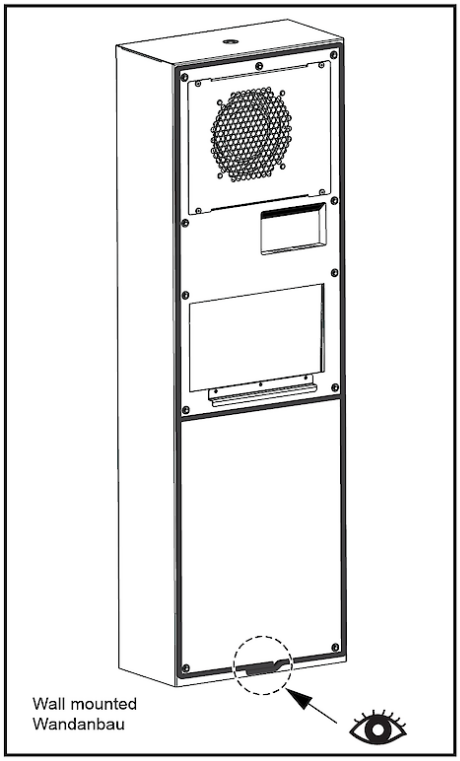

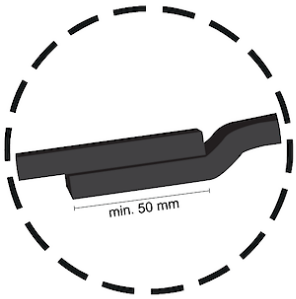

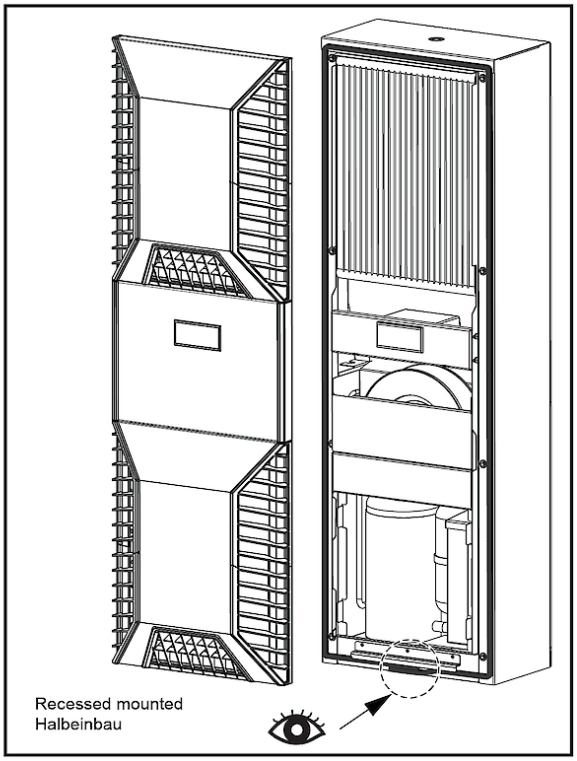

For KG 8562 only:

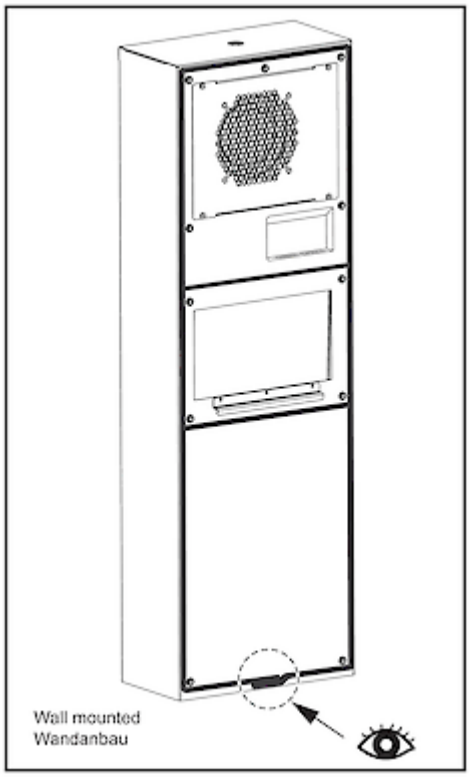

9. Condensate management

High humidity and low temperatures inside enclosures will cause condensation on the evaporator. Condensate that drips into the enclosure can permantly damage sensitive electronics and lead to malfunction.

SLIMLINE PRO cooling units have an automatic electrical condensate evaporation with a self-regulating PTC heating element. Condensate that forms on the evaporator is collected in a container in the internal circuit. Depending on the amount, it reaches the heating element and evaporates. The heating element is permanently on.

In the event of a malfunction, failure or excessive condensate formation, the condensate is drained out of the cooling unit from the front through the lower gill grilles. If this hose is removed, the cleaning drain MUST be open (see also point 17. Maintenance & Cleaning).

In order to prevent excessive condensation, you should still check the cooling unit and enclosure seals regulary and consider installing a door contact switch (order no. 3100001).

10. Mounting Principle

NOTES:

- Do not use within the first 15 minutes after installation!
- Use only the supplied mounting hardware.
- Tighten Screws to 4.5 Nm.
- Ensure the mounting surface does not warp after assembly and reinforce it if necessary.
- With the full gasket (5mm thickness), unit provides IP 56 and TYPE 12/ 3/ 3R/ 4/ 4X protection.
- With the gasket tape (3mm thickness), the unit provides IP 55 and TYPE 12 protection.

1 M6 screws
2 M6 toothed washers
3 M6 flat washers
4 Enclosure
5 Mounting gasket
6 Lifting sling
7 Cover
8 M4 screws
Fig. 1Recessed
Fig. 2External

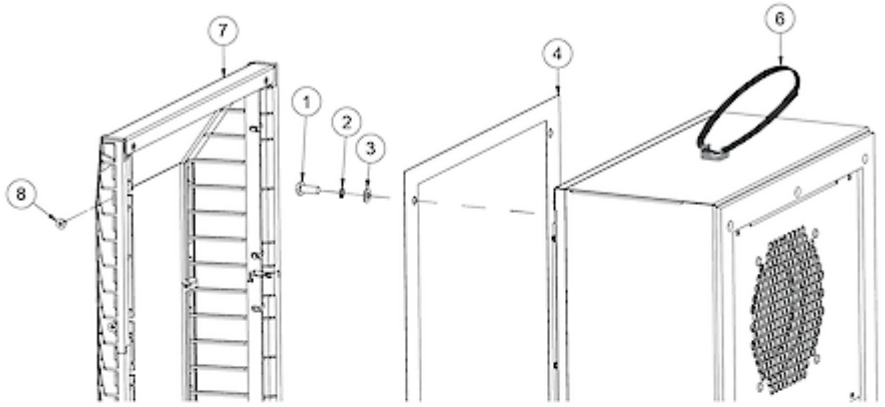

Fig. 1

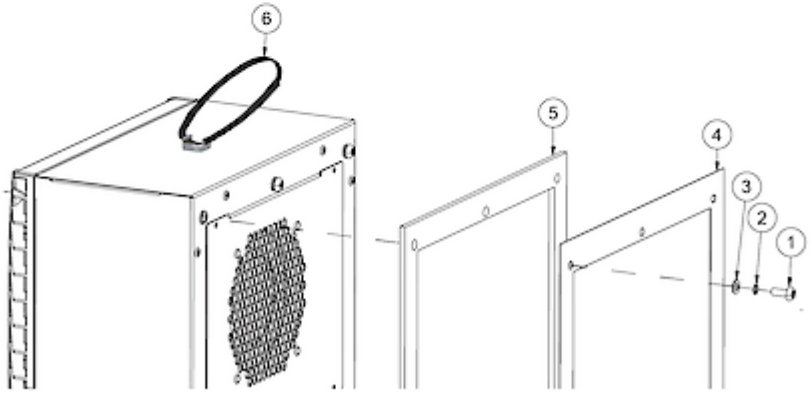

Fig. 2

11. Cut Out Dimension

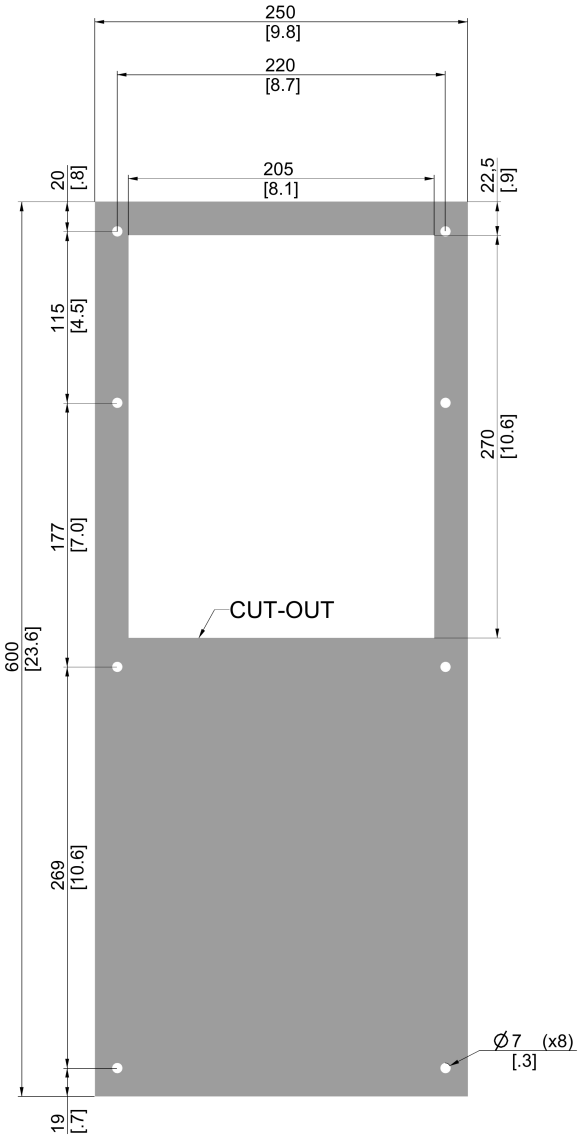

CUT-OUT FOR EXTERNAL

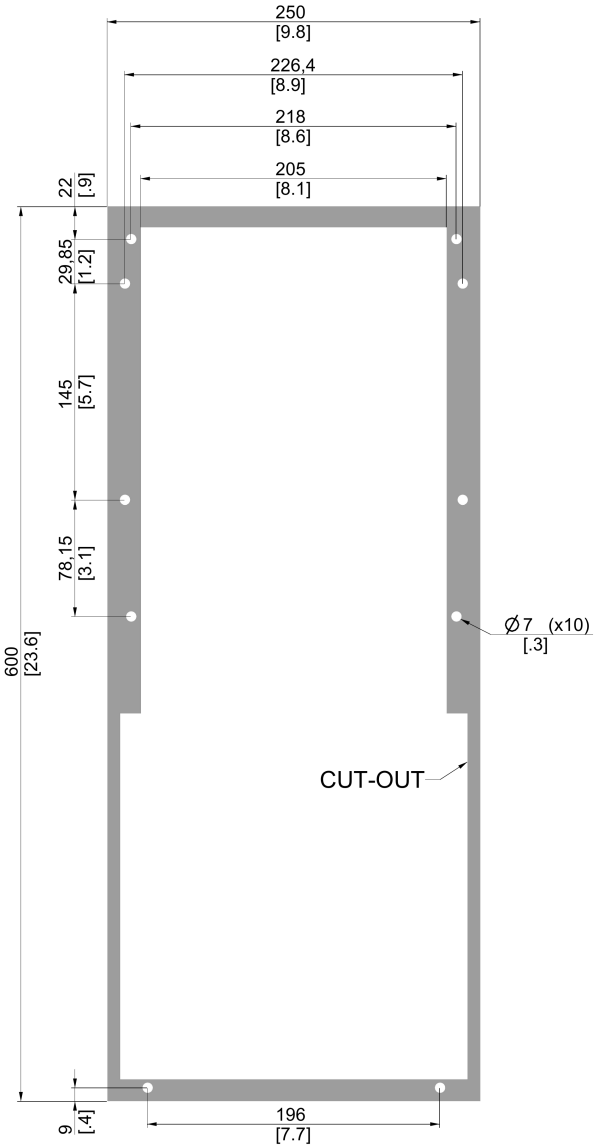

CUT-OUT FOR RECESSED

12. Electrical Connection

Alarm Contacts:

Alarm contacts rated according to:

EN60730-1	8(4)A N.O., 6(4)A N.C., 2(2)A N.O./ N.C. @ 250Vac	100000 cycles
UL 873	8A resistive 2FLA 12LRA, pilot duty C300 @ 250Vac	30000 cycles

These contacts are not suitable for fluorescent loads (neon lights, etc.) that use starters (ballasts) with phase shifting capacitors. Fluorescent lamps with electronic controllers or without phase shifting capacitors can be used, depending on the operating limits specified for each type of relay.

Door Switch:

The unit can be switched on and off via a door contact switch. When delivered the door contact terminals are bridged on the female connector. To connect the door contact switch, remove the bridge and connect door contact switch. The contact must be closed when the cabinet door is closed.

It is possible to change the logic of the door switch (controller firmware rev. 1.2 or higher). This can be set by changing the value of parameter c68. Refer to table below and section Controller: Setting temperature units (°C / °F), low temperature alarm, high temperature alarm, door contact logic section for more information.

c68 = 0 (default)	ON if closed – Door contact terminals bridged, or NC door switch connected (contact must be closed when the cabinet door is closed)
c68 = 1	ON if open – Remove bridge, or NO door switch connected (contact must be open when the cabinet door is closed)

SCCR:

Refer to UL508A Supplement SB and Seifert Systems' document Short Circuit Current Rating (SCCR) on methods how to modify the available short circuit current within a circuit in the panel.

13. Controller

When started, the display shows the internal temperature of the cooling unit and serves as the home menu for control.

Buttons	LED Functions
□ **Menu**	Blue LED: Steady On - Cooling mode
◯ **Set**	Blue LED: Blinking - min. compressor off time not elapsed
△ **Up**	Red LED: Steady On - Heating mode (opt.) Red LED: Blinking - Alarm
▽ **Down**	Rightmost digit – Master / Slave indicator

***i)* Operations from Home Screen:**

- Pressing △ or ▽ for 1 second will go to Menu 1. This will show the status of DI1, DI2, S1, S2, Onboard Sensor and total Alarms. Pressing △ or ▽ will toggle between sensors/digital inputs and alarms.
- Pressing □ will go to Menu 2.
- Any Alarms will appear on the Home Screen.
- If the Door Contact is Open, the Home Screen will show an OFF status.
- Pressing △ and ▽ simultaneously for 3 seconds will start Test Mode

***ii)* Operations from inside the Menus:**

- Pressing □ from any menu will return to the Home Screen.
- Pressing ◯ while in Menus 2/3 shows the parameter value.
- Pressing ◯ for 3 seconds while showing a parameter, will save the parameter.
- Pressing □ while showing a parameter, will return to the respective menu.

***iii)* Menu Access using passwords:**

- As standard, the user can only access Menus 1 and 2.
- When using the client password, the user is allowed access to Menu 3.
- This password can be set at any value between 0 and 9998.

All parameters are sorted in 3 separate menus.

Menu 1

Parameter	Description	Range
Sbrd	Onboard sensor Reading	-
S1	S1 Sensor Reading	-
S2	S2 Sensor Reading	-
d1	Digital Input 1 reading	0: Open 1: Closed
d2	Digital Input 2 reading	0: Open 1: Closed
AL1 - AL10	Alarms Counters for Alarm 1 to Alarm 10, (alarm description is described in table Alarm Codes below)	Alarm counts up to 250 per alarm

Menu 2

Parameter	Description	Input	Setting range
Ct_S	Control Setpoint	△ or ▽ to Increase/Decrease Temperature	Min: ccS1 Max: ccS2
HA_S	High Alarm Setpoint	△ or ▽ to Increase/Decrease Temperature	Min: HAS1 Max: HAS2
LA_S	Low Alarm Setpoint	△ or ▽ to Increase/Decrease Temperature	Min: LAS1 Max: LAS2
Ht_S	Heater Setpoint	△ or ▽ to Increase/Decrease Temperature	Min: HS1 Max: HS2
C_F	Celsius / Fahrenheit	△ or ▽ to change between ºC and ºF	C: Celsius F: Fahrenheit
IP_1	Input 1 Invert	△ or ▽ to changes between NC/NO door contact	0: NC 1: NO
StAt	System State	Read Only	OFF: Off dL: Idle CL: Cooling Ht: Heating tSt: Test
OUtP	Relay Outputs	Read Only	H: Heater Relay A: Ambient Blower relay C: Compressor Relay
PASS	Password	△ to increase number and ▽ to change digit An incorrect Password will reset the input to 0 The correct password opens MENU 3	Any number between 0 and 9999

Menu 3

Parameter	Description	Input	Setting range
Add	Modbus Address	△ or ▽ to increase or decrease Modbus address	Any number between 1 and 254
SLoc	Setpoints Lock	△ or ▽ to change between Locked/Unlocked	0: Unlocked 1: Locked
CPSS	Change Password	△ to increase number and ▽ to change digit	Any number between 0 and 9998
MS1	Master Enable	Master On/Off	ON: Master On OFF: Master Off
MS2	Master Mode	△ or ▽ to change Master Mode	NONE: None IDN: Identical Mode PR: Power Mode
MdL	Power Mode Delta Temperature	△ or ▽ to increase or decrease temperature	Min: 0 Max: 9999
rS1	Redundancy Mode	△ or ▽ to change between Redundancy Modes	NONE: None A: Redundancy Mode A B: Redundancy Mode B
rS2	Redundancy Start-up	△ or ▽ to increase starting units	Min: 1 Max: 10
rS3	Redundancy Timeout	△ or ▽ to increase time (Minutes)	Min: 0 Max: 9999

Alarm codes

Alarm Code	Description
AL1 - HI	High Temp Alarm
AL2 - LO	Low Temp Alarm
AL3 - PrEP	Pressure Pipe Alarm
AL4 - AbS	Ambient Sensor Faulty
AL5 - PPS	Pressure Pipe Sensor Faulty
AL6 - ICES	Ice Sensor Faulty
AL7 - InS	Internal Sensor Faulty
NA	*Not Available*
AL9	*...Check 'Digital Input 2' Table below*
AL10 - ICE	Ice Algorithm Active
AL11 - SLOC	Incorrect Sensor Location

Digital Input 2 Table

dIn2	Generic Error
PH_F	Phase Failure
Pr_S	Pressure Switch
FL_S	Float Switch

Test mode

- Test mode is started by simultaneously pressing △ and ▽ for 3 seconds.
- When Test run is active, tESt will be shown blinking on the display.

Test procedure when Internal Temperature is between 10°C and 49°C.

0 - 30 seconds	Ambient blower
30 seconds - 5:30 minutes	Ambient blower + compressor
5:30 - 6:30 minutes	Ambient blower + heater

Master / Slave and Redundancy Functionality

i) Master / Slave Mode - Specifications

- Network of maximum 10 units.
- The Modbus addresses of the units need to be set manually.
- Unit addresses need to be between 1 and 10.
- The Master unit must be set with Address 1. When setting a master, an extended menu opens to set the Master/Slave and Redundancy modes.
- The Master unit is the unit which controls all the Master/Slave and Redundancy Operations.
- The Client only needs to set the Master, the other units (addresses 2 to 10) do not need to be set and will convert to Slaves automatically. For a unit to be a slave and included in the network, an address between 2 and 10 needs to be pre-set.
- When communication with the Master is lost, all Slaves will return to normal mode.
- Setting the number of units in the network is not required as the Master will try to communicate with all Slaves (units 2 to 10), but operates the algorithm based on the online units.
- Every pre-defined time, the Master unit will try to communicate with the Offline Units.
- If a Slave is in an alarm condition, the Master will power the Alarm LED, but does not show the Alarm code.
- The system can operate in Master/Slave only, Master/Slave + Redundancy or Redundancy Only.
- If a unit needs to operate in Heating Mode, any Master/Slave/Redundancy operation is ignored. If the Master needs to operate in Heating Mode, the Slaves continue to operate in Master/Slave/Redundancy mode and enter cooling mode if necessary. The algorithm for the slaves will still be controlled by the Master, although the Master may possibly be in heating mode.
- The Master can only be enabled via the Display or via Gateway. It can be enabled via Modbus, but for the Gateway operation only rather than for Client use and a Modbus Controller will not be able to communicate with the units anymore. The Seifert Gateway acts as a Slave in the Master/Slave network and will still be able to communicate with the Master.

When a network is in MSR mode, the flashing of the 4th digit dot (right most digit), indicates the status of the unit in the MSR status. Below is a table describing the flashing based on the unit status.

Master Unit	Continuous blinking	**1**0**1**0**1**0**1**0**1**0**1**0**1**0**1**0**1**0**1**0**1**0**1**0
Slave Unit	Blinking 2x and pause	**1**0**1**000000000000**1**0**1**000000000
Master Unit Redundant	Blinking 3x and pause	**1**0**1**0**1**000000000000**1**0**1**0**1**000000000
Slave Unit Redundant	Blinking 4x and pause	**1**0**1**0**1**0**1**000000000000**1**0**1**0**1**0**1**000000000

Master settings

Display	Description
MS1	Master On/Off
MS2	Master Modes: None, Identical, Power
MdL	Power Mode Delta Temperature

MS2: Master Modes

None:

- All units are Independent of each other.
- Each unit operates using its own setpoint and its own Internal Temperature.
- The Master still communicates with the Slave units to gather information in case information needs to be communicated to the Gateway.

Identical Mode:

- All units operate as one single unit.
- The Master operates using the Maximum Internal Temperature in the network, and the Slaves follow the operation of the Master.
- In this mode, the client needs to only set the Master setpoints.
- If a Slave needs to execute the heating mode, Master/Slave operation is ignored.
- If the Master needs to execute the heating mode, the Slaves will keep operating on the Maximum Internal Temperature of the network.

Power Mode:

- All units operate using the Master Setpoints but using their own Internal Temperature.
- If any unit Internal Temperature exceeds the Master Control Setpoint + Delta, the Master takes back control of all the Slaves and operation is changed to Identical Mode.
- If all Internal Temperatures fall below the Master Control Setpoint, control is released from the Master and the Slaves will operate Independently based on their own Internal Temperature whilst using the Master Setpoints.
- If a Slave needs to operate in heating mode, Master/Slave operation is ignored.
- If the Master needs to operate in heating mode, the Slaves will keep operating on the Maximum Internal Temperature of the network.

ii) Redundancy Mode

Redundancy settings

Display	Description
rS1	Redundancy Modes: None, Mode A, Mode B
rS2	Start-up Mode
rS3	Changeover Timeout in Minutes

RS1: Redundancy Modes:

None:
No redundancy, all units operate normally

Mode A:
In this mode, there will be 2 sets of units, and they will toggle between each other after a pre-defined time. The start-up units are settable.

Below is an example, starting with Units 1 to 4 ON (Grey ON, White OFF)

1	**2**	**3**	**4**	**5**	**6**	**7**	**8**	**9**	**10**
1	**2**	**3**	**4**	**5**	**6**	**7**	**8**	**9**	**10**
1	**2**	**3**	**4**	**5**	**6**	**7**	**8**	**9**	**10**
1	**2**	**3**	**4**	**5**	**6**	**7**	**8**	**9**	**10**

Mode B:
In this mode, the system will ‘move’ one unit at a time after the pre-defined time.

Below is an example, starting with Units 1 to 4 ON

1	**2**	**3**	**4**	**5**	**6**	**7**	**8**	**9**	**10**
1	**2**	**3**	**4**	**5**	**6**	**7**	**8**	**9**	**10**
1	**2**	**3**	**4**	**5**	**6**	**7**	**8**	**9**	**10**
1	**2**	**3**	**4**	**5**	**6**	**7**	**8**	**9**	**10**
1	**2**	**3**	**4**	**5**	**6**	**7**	**8**	**9**	**10**
1	**2**	**3**	**4**	**5**	**6**	**7**	**8**	**9**	**10**
1	**2**	**3**	**4**	**5**	**6**	**7**	**8**	**9**	**10**
1	**2**	**3**	**4**	**5**	**6**	**7**	**8**	**9**	**10**

Setting rS2, Start-up Mode, indicate the number of units to start when redundancy is active (Mode A/B). If the setting is set to 4, this means that on the first cycle, unit 1 to 4 are switched ON. If setting is set to 4 but unit 2 is offline, on the first cycle, units 1, 3, 4, 5 are ON.

- Setting rS3, Changeover Timeout, indicates the duration of each cycle. This can be a value from 1 to 9999 minutes.
- If a Slave needs to execute heating mode, Redundancy operation is ignored.
- If the Master needs to execute heating mode, the Slaves will keep operating based on the Redundancy Algorithm.
- The redundancy time increases only if there is at least one active (non-redundant) unit cooling from the active units group.
- The changeover between units happens only if no active unit is cooling.

Modbus Communication

Detailed instructions on Modbus communication can be found in the link below.

https://seifertsystems.com/site/assets/files/6903/rdtg2001-0_2_-_generic_modbus_table.pdf

Further notes:

- From Modbus side, any setting can be with 0.1°C precision. From the display, the precision is 0.5°C. When having a setting, example 30.4°C, this will be rounded to 30.5°C when accessed via display.
- When Ambient, Icing and Pressure are not enabled, the value displayed (Modbus) is -50°C.
- When saving settings via communication, **"S"** is shown on display for 1 second.
- When system goes in Cooling Mode, **"C"** is shown on display for 1 second.
- When system goes in Heating Mode, **"H"** is shown on display for 1 second.
- When accessing the Display Settings of Menu 2/3, any settings from Modbus are ignored.
- When running a test with the door contact open, the display only shows TEST, since the unit will not be OFF.
- When running a test with Alarms, the Alarms and TEST are shown together.
- When unit is **not** Modbus Address 1, the Master/Slave and Redundancy parameters are hidden from Menu3 when using Client Password. (MS1, MS2, MdL, rS1, rS2, rS3).
- The Blue LED is ON when the unit is cooling.
- A red LED is ON when the unit is heating.
- The red LED flashes when an alarm is present.

14. Wiring Diagram

Power connector	
1	L1
2	/
3	N
4	PE
Signal connector	
1	Alarm (NC)
2	Alarm (COM)
3	Alarm (NO)
4	Door contact
5	Door contact
RS 485 connector	
1	A
2	GND
3	B

X1:	Power connector	X2:	Signals/Alarms connector	X3:	Master/Slave connector
MI:	Internal fan	MA:	Ambient fan	MC:	Compressor
CC:	Compressor capacitor	Si:	Internal temp sensor	Sa:	Ambient temp sensor
HI:	Internal heater	HC:	Compressor crankcase heater	Ps:	12VDC power supply
CE:	Condensate Evaporator				

NOTES:
1) Use supply wires suitable for 75°C (167°F)
2) Use copper conductors only.
3) Optional components in dashed borders.

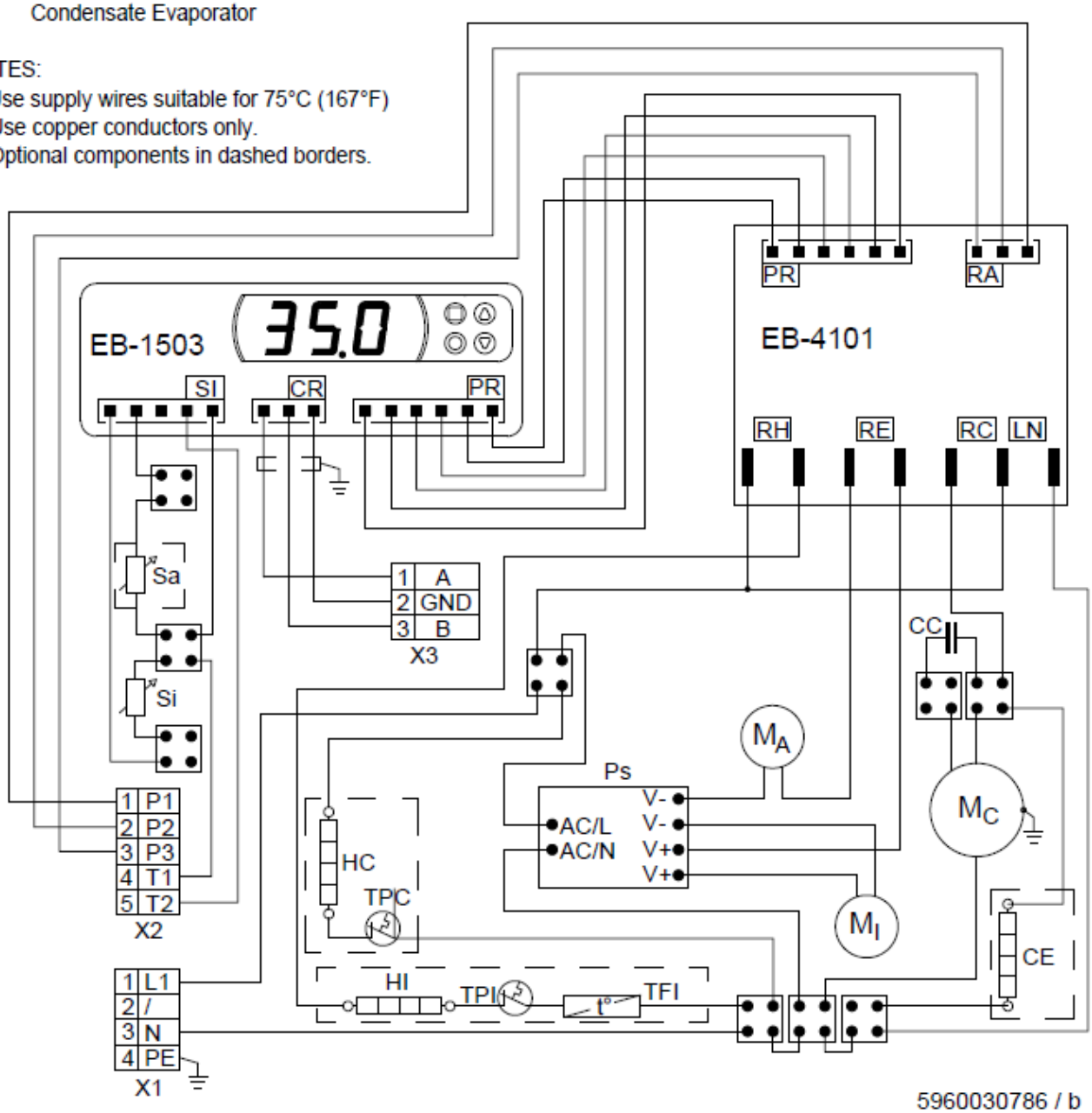

15. Taking into Operation

Attention!
The unit can be damaged by lack of lubricant. To ensure that the compressor is adequately lubricated the oil, which has been displaced during transport, must be allowed to flow back into it. The unit must therefore be allowed to stand for at least 30 min. before being connected to the mains and taken into operation.The unit / system must be protected with a MCB Type D or K.

Upon connection the internal and external fans will start working. The external fan turns off after 3 minutes, but the internal fan stays on. If the temperature inside the enclosure is higher than the set value of the controller both the compressor and external air fan start working. The cooling cycle will either stop once the air inside the enclosure reaches the set temperature minus hysteresis or once the minimum On-time is reached. The setpoint for the internal enclosure temperature is pre-set at 35°C.

The hysteresis is 3K, the minimum ON-time is 4 minutes, the minimum OFF-time is 3 minutes, for units with a cooling capacity of more than 1 kW is it usually 7 minutes.

16. Trouble Shooting

Failure	Condition	Cause	Solution
Unit doesn't cool	Internal fan does not work	Power not connected.	Verify power supply
	Internal fan works, external fan and compressor don't work	Enclosure temperature is below the control setpoint temperature	Verify values of parameter "**Ct S**"
		Door switch contact is open	Verify door switch
		Controller doesn't work	Replace controller
	Internal fan works, external fan and compressor don't work. Display shows alternating OFF and temperature	The sequence of the phases inside the power supply connector is incorrect	Change phases inside power supply connector
	External and internal fan work, compressor does not work	Compressor motor electrical failure	Have compressor replaced by qualified service technician
		Capacitor for compressor failed	Replace capacitor
	Compressor works, external fan doesn't work	External fan needs to be replaced	Replace external fan
Enclosure temperature too high	Compressor and fans (external and internal) work all the time	Cooling unit undersized	Enclosure needs a cooling unit with with higher capacity
	Compressor and external fan work in alternating mode (ON / OFF)	Thermal compressor protector triggered	Verify if ambient temperature is too high,clean condenser
		Refrigerant leakage	Contact dealer/service center
Excessive condensate	Enclosure door open	Ambient air gets into the enclosure	Ensure door is closed, add a door switch and connect it to controller
	Enclosure door closed	Enclosure IP protection class is below IP54	Seal all openings of the enclosure
		Damaged or misplaced sealing strip	Repair sealing strip accordingly

17. Maintenance & Cleaning

Always switch power supply off before starting any maintenance on the unit.
Wait for 5 minutes for electrical components to discharge.

The cooling unit is generally maintenance free and can be operated without filters in most environments.

If the ambient air is extremely dusty and/or oily, we recommend using aluminum filters (see accessories). These should be cleaned or replaced at regular intervals (see point 8. Mounting)

Oily or greasy aluminum filters can be washed out with water or degreasing cleaning agents. The corresponding environmental protection measures must be observed.

Note: The use of aluminium filters reduces the cooling capacity of the unit.

Oel & cleaning drain pipe connection

The oel & cleaning drain is in the base of the unit. To install an oel & cleaning pipe, please follow below steps:

1. Remove the plastic stopper from in the base of the unit (factory setting is locked)
2. Dispose the plastic stopper but keep the Slilicon washer
3. Insert the drain socket
4. Lock it clockwise and fix the oel & cleaning pipe onto it

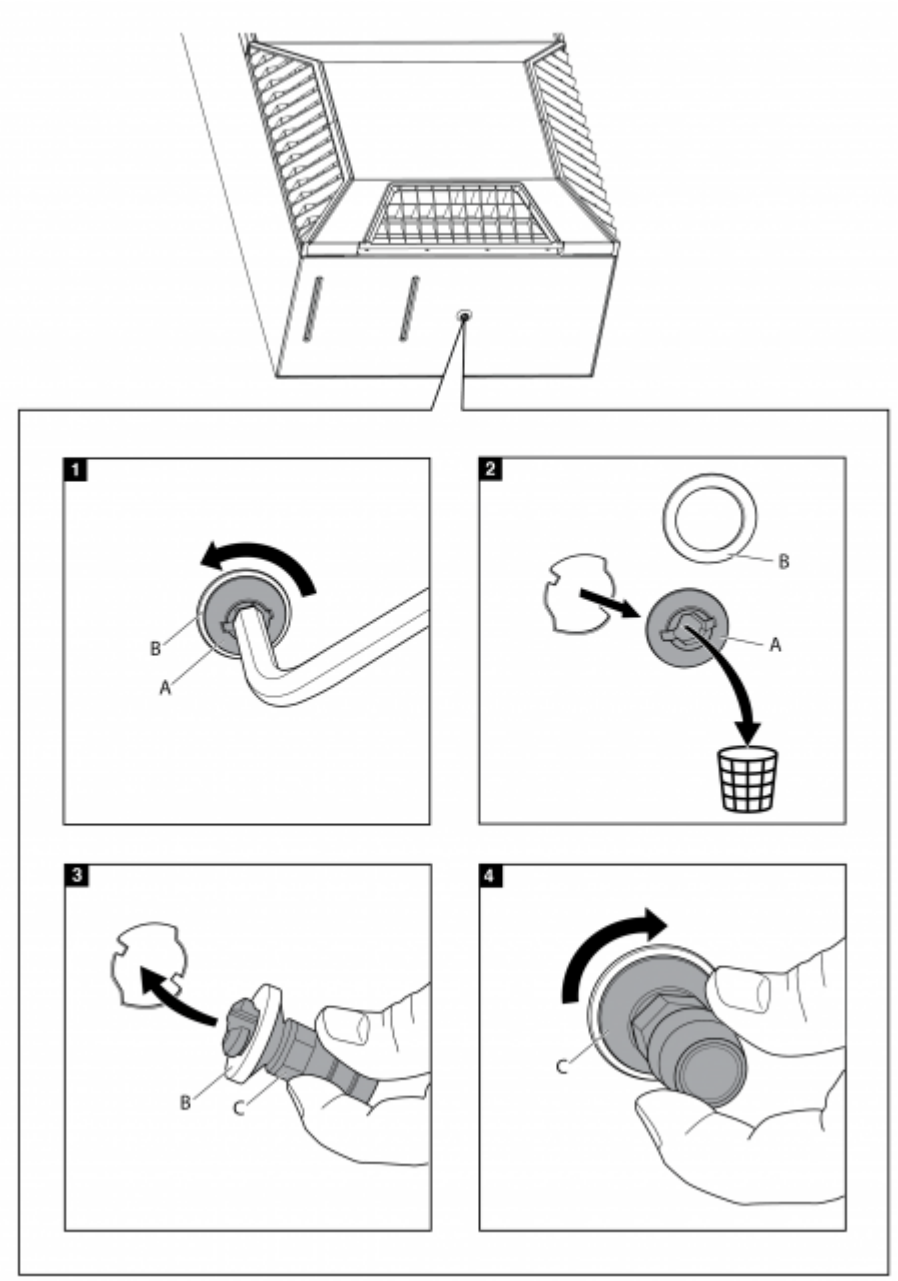

Disposal
The cooling unit contains R134a refrigerant and small quantities of lubricating oil. Replacement, repairs and final disposal must be done according to the regulations of each country for these substances.

18. Transport & Storage

Malfunction due to transport damage
On delivery the carton box containing the unit must be examined for signs of transport damage. Any transport damage to the carton box could indicate that the unit itself has been damaged in transit which in the worst case could mean that the unit will not function.
The unit can only be stored in locations which meet the following conditions:

- Temperature range: - 40°C to 70°C
- Relative humidity (at 25°C): max. 95 %
- The cooling unit should always be stored according to the installation position

Returning the unit
To avoid transport damage the unit should be returned in the original packing or in a packing case and must be strapped to a pallet. If the unit cannot be returned in the original packing please ensure that:

- A space of at least 30 mm. must be maintained at all points between the unit and the external packing.
- The unit must be shipped in the same position as it was mounted.
- The unit must be protected by shock resistant padding (hard foam corner pieces, strips or cardboard corner pieces).

19. Parts supplied / Spare parts / Accessories

Description	QTY	Image
Instruction manual	1	
CE Declaration	1	
M6 * 16 bolts	8	
A6.4 toothed washers	8	
A6.4 washers	8	
5 - pole terminal block for signals	1	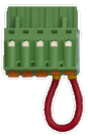
4 - pole terminal block for electrical connection	1	
3 - pole terminal block for RS 485	1	
Drain fitting	1	
Foam tape		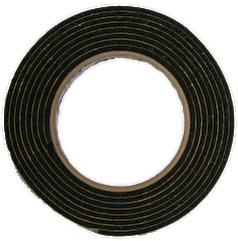
Full mounting gasket		

Spare parts:

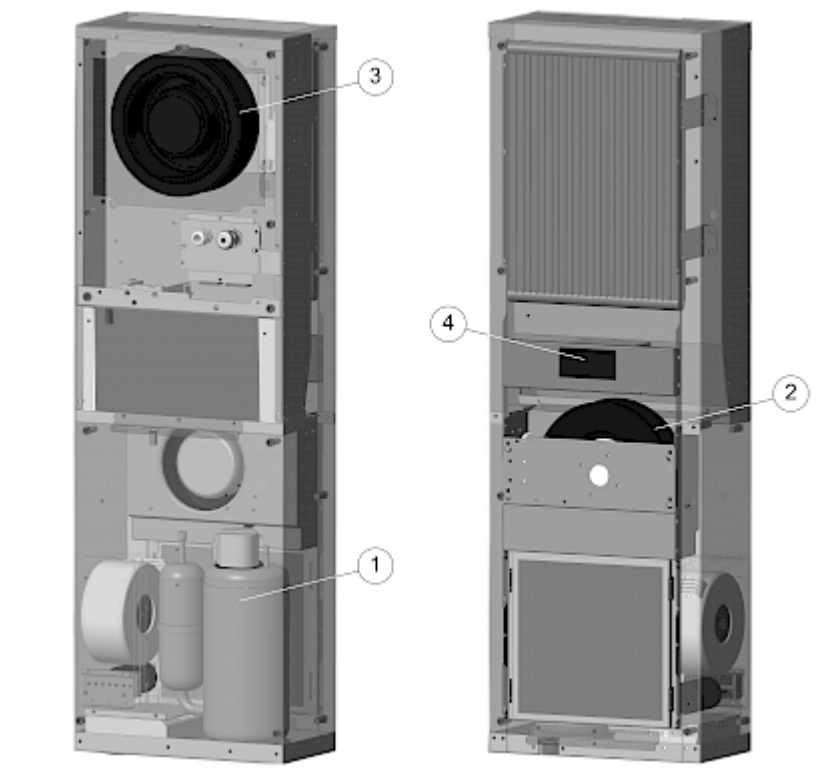

	Description	Order no.
1	Spare Part Kit - Compressor	SP-850600001-A
2	Spare Part Kit - Ambient fan	SP-850600001-B
3	Spare Part Kit - Internal fan	SP-850600001-C
4	Spare Part Kit - Controller	SP-850600001-D
	Spare Part Kit - Installation parts	SP-850600001-P

Please always state the serial number of the cooling unit when ordering any spare parts. *Note:* only original spare parts should be used. For further information or querries kindly contact our service department on service.emea@seifertsystems.com

Accessories:

Description	Order no.
Washable aluminium filter	AC-8503/06-BF-1
Cold air outlet duct	AC-8503/06-BZ-1
External transformer 400/460 V 2~	AC-8503/05/06-CS-1
Door switch contact	3100001

Seifert Systems GmbH
Albert-Einstein-Str. 3
42477 Radevormwald
Germany
Tel.+49 2195 68994-0
info.de@seifertsystems.com

Seifert Systems Ltd.
HF09/10
Hal-Far Industrial Estate
Birzebbuga, BBG 3000
Malta
Tel.+356 2220 7000
info@seifertsystems.com

Seifert Systems AG
Wilerstrasse 16
4563 Gerlafingen
Switzerland
Tel.+41 32 675 35 51
info.ch@seifertsystems.com

Seifert Systems GmbH
Bärnthal 1
4901 Ottnang
Austria
Tel.+43 7676 20712 0
info.at@seifertsystem.com

Seifert Systems Ltd.
Rep. Office
26100 Cremona
Italy
Tel.+39 349 259 4524
info@seifertsystems.com

Seifert Systems Inc.
75 Circuit Drive
North Kingstown
RI 02852
USA
Tel.+1 401-294-6960
info.us@seifertsystems.com

Seifert Systems Pty Ltd.
105 Lewis Road
Wantirna South
3152 Victoria
Australia
Tel.+61 3 98 01 19 06
info@seifertsystems.com.au