Table of Content 43100001

1. User manual 2
2. Legal regulations 2
3. Safety instructions 3
4. Application 4
5. Functional principle 5
6. Technical data 6
7. Performance graph 7
8. Mounting 8
9. Mounting Principle 9
10. Cut out dimensions 10
11. Dimensions (H x W x D) 11
12. Electrical connection 12
13. Controller 13
14. Wiring diagram 14
15. Taking into operation 15
16. Trouble shooting 15
17. Maintenance & Cleaning 15
18. Transport & Storage 16
19. Parts supplied / Spare parts / Accessories 17

1. User manual

This instruction manual contains information and instructions to enable the user to work safely, correctly and economically on the unit. Understanding and adhering to the manual can help one:

- Avoid any dangers.
- Reduce repair costs and stoppages.
- Extend and improve the reliability and working life of the unit.

PLEASE ENSURE TO USE THE RIGHT VERSION OF THE INSTRUCTION MANUAL SUITABLE FOR YOUR UNIT.

Intended use
The unit is to be used exclusively for the dissipation of heat from control cabinets and enclosures in order to protect temperature sensitive components in an industrial enviorment. To meet the conditions of use, all the information and instructions in the instruction manual must be adhered to.

General danger
Indicates compulsory safety regulations which are not covered by a specific pictogram such as one of the following.

High electric voltage
Indicates electric shock danger.

Important safety instruction
Indicates instructions for safe maintenance and operation of the unit.

Attention
Indicates possible burns from hot components.

Attention
Indicates possible damage to the unit.

Instruction
Indicates possible danger to the environment.

2. Legal regulations

Liability
The information, data and instructions contained in this instruction manual are current at the time of going to press. We reserve the right to make technical changes to the unit in the course of its development. Therefore, no claims can be accepted for previously delivered units based on the information, diagrams or descriptions contained in this manual. No liability can be accepted for damage and production caused by:

- Disregarding the instruction manual
- Operating error
- Inappropriate work on or with the unit
- The use of non-specified spare parts and accessories
- Unauthorised modifications or changes to the unit by the user or his personnel

The supplier is only liable for errors and omissions as outlined in the guarantee conditions contained in the main contractual agreement. Claims for damages on any grounds are excluded.

3. Safety instructions

Upon delivery the unit is already meeting current technical standards and can therefore be safely taken into operation. Only authorised personnel is allowed to work on the unit. Unauthorised personnel must be prohibited from working on the unit. Operating personnel must inform their superiors immediately of any malfunction of the unit.
Please note that before starting to work on or with the unit, a procedure must be carried out inside the cabinet on which the unit is to be mounted.
Before commencing work inside the cabinet, the control cabinet manufacturer's instruction must be read with regards to:

- Safety instructions.
- Instructions on taking the cabinet out of operation.
- Instructions on the prevention of unauthorised cabinet reconnection.

The electric equipment meets the valid safety regulations. One can find dangerous voltages (above 50 V AC or above 100 V DC)

- Behind the control cabinet doors.
- On the power supply in the unit housing.

The unit has to be operated according to the type plate and the wiring diagram, and must be protected externally from overloading and electrical faults via suitable protective devices.

Danger through incorrect work on the unit
The unit can only be installed and maintained by technical competent and qualified personnel, using only supplied material according to the supplied instructions.

Danger from electrical voltage
Only specialised personnel are allowed to maintain and clean the unit. The personnel must ensure that for the duration of the maintenance and cleaning, the unit is disconnected from the electrical supply.

Attention
Damage to the unit through the use of inappropriate cleaning materials. Please do not use aggressive cleaning material.

Instruction
Damage to the environment through unauthorised disposal. All spare parts and associated material must be disposed according to the environmental laws.

4. Application

The cooling unit is intended to be used as a complementary accessory to larger industrial equipment. The unit is used where heat needs to be dissipated from electrical control cabinets or similar enclosures in order to protect heat sensitive components. *It is not intended for household use*.
The unit has two completely separate air circuits which ensure that the clean cabinet air does not come into contact with the ambient air which may well be dirty or polluted.
Enclosure cooling units can dissipate large quantities of heat from sealed enclosures such as electrical enclosures into the ambient air and at the same time reduce the cabinet internal temperature to below that of the ambient air.
The unit can function without problems in extreme ambient conditions (e.g. dusty and oily air) with a standard operating temperature ranging between 50°F and 131°F. Units can be ordered with an additional electrical cabinet heater. For the cooling capacities and environmental ratings please refer to the type plate data.

5. Functional principle

The cooling unit for enclosures works on the basis of a refrigeration circuit consisting of four main components: compressor (1), evaporator (2), condenser (3) and expansion device (4).
The circuit is hermetically sealed and R134a refrigerant circulates inside it (R134a is chlorine free and has an Ozone Destruction Potential [ODP] of 0 and a Global Warming Potential [GWP] of 1430). The compressor compresses the refrigerant (thus taking it to high pressure and high temperature), and pushes it through the condenser, where it is cooled by ambient air thus passing from the gas to the liquid state. At the liquid state it then passes through the capillary pipe being a much lower pressure the refrigerant arrived to the evaporator where it absorbs the necessary heat to change from liquid to gas state. The gas is then drawn back into the compressor completing the cycle.

Gestion de la condensation
Dans des environnements humides et de basses températures internes d'enceintes, une condensation peut se former sur le serpentin de l'évaporateur. Les unités de refroidissement standard 43XXX0XXX ont une purge d'évacuation vers le fond de l'unité pour le raccordement au tuyau d'évacuation.
Les unités de refroidissement 43XXX1XX incluent un évaporateur condenseur interne basé sur des cartouches autorégulatrices CTP. Le condensat est égoutté vers un récipient interne où il s'évapore quand il est en contact avec la surface de la cartouche. La vapeur en résultant est dirigée vers le condenseur. La cartouche de chauffage CTP est raccordée en permanence. Le récipient a une purge pour le trop-plein en bas de l'unité. Un tuyau d'évacuation est fourni pour se brancher sur la purge de trop-plein.

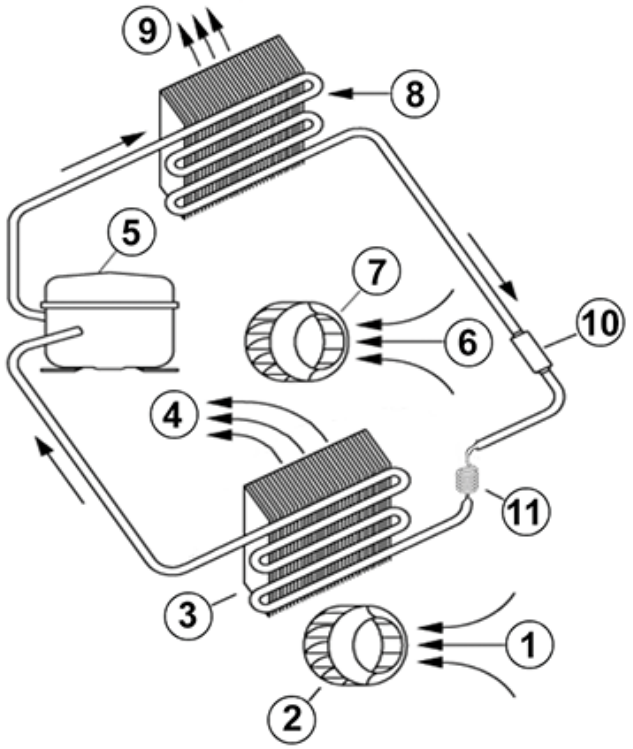

6. Technical data

Order Number	43100001
Cooling capacity 95F/95F	3680 BTU
Cooling capacity 95F/122F	2540 BTU
Compressor type	Reciprocating compressor
Refrigerant / GWP	R134a / 1430
Refrigerant charge	180 g / 6.3 oz
High / low pressure	29.5 / 6 bar 425 / 88 psig
Operating temperature range	50°F - 131°F
Air volume flow (system / unimpeded)	Ambient air circuit: 240 / 500 cfm Cabinet air circuit: 175 / 324 cfm
Mounting	External
Housing Material	Mild steel, powder coated
Dimension H x W x D	25.6 x 12.4 x 10.2 inch
Weight	66 lbs.
Cut out dimensions	25 x 10.83 inch
Voltage / Frequency	230 V ~ 50/60 Hz
UL Voltage / Frequency	230 V ~ 60 Hz
Current 95F95F	3.2 A
Starting current	15.9 A
Max. current	4.1 A
Nominal power 95F95F	550 W @ 50 Hz 640 W @ 60 Hz
Max. power	820 W
Fuse	10 A (T)
Short-circuit current rating	5 kA
Connection	Connection terminal block
Ingress protection	TYPE 12
Approvals	CE, cURus, cULus

7. Performance graph

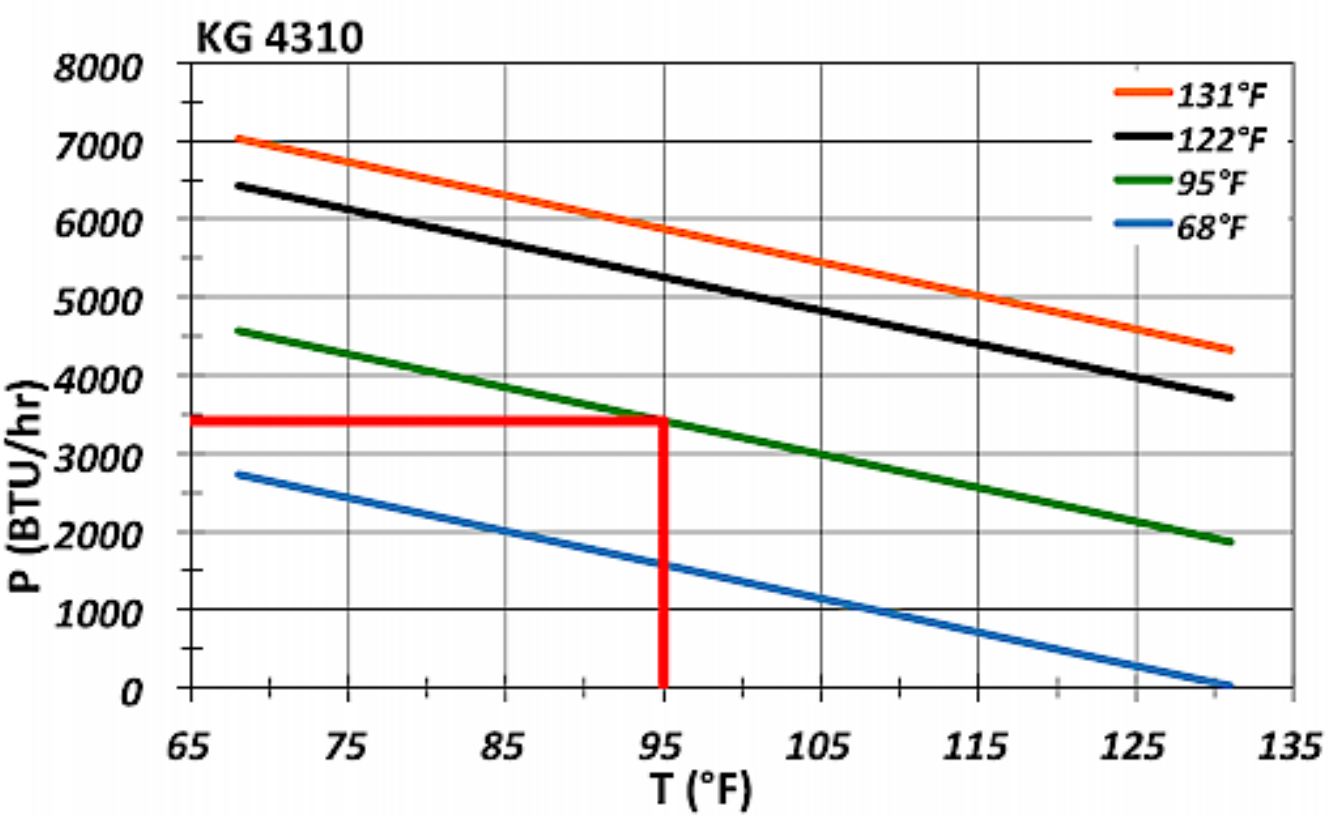

8. Mounting

The power supply rating on unit rating plate must comply with mains rating.

Always disconnect the power supply before opening the unit.

The heat load to be dissipated from enclosure should not exceed specific cooling output of the unit at any condition. At cooling unit selection always cater for a safety margin of at least 15% extra cooling output in the worst conditions.

Ensure that flows of air leaving and entering the cooling unit, internal and external, are not obstructed. It must also be ensured in accordance with UL, that the air outlet is not blowing air directly at an equipment operator. Should this be the case a barrier or duct shall be provided to redirect the airflow.

Cooling unit enclosure air suction hole must be installed in the highest possible point. When installing the unit on a door ensure it can take the weight.

Before drilling the enclosure ensure the fixing elements and couplings will not interfere with the equipment inside the enclosure itself. Disconnect power before starting any work inside the enclosure. Following this 1:1 Scale Drilling Template drill the holes and make the required cuts on the enclosure. This template may have been affected by storage conditions, please check this template by verifying values of the largest dimensions before drilling. Fit the sealing strip on the cooling unit on the side connected to the enclosure and follow the installation diagram.

Note: In case of 19" rack mounted units please ignore the above mounting instructions.

9. Mounting Principle

Do not use within the first 15 minutes after installation!

1	M6 screws
2	M6 flat washers
3	M6 toothed washers
4	Cabinet
5	Sealing tape
6	Cooling unit
7	Lifting hook
Fig. 1	Recessed
Fig. 2	External

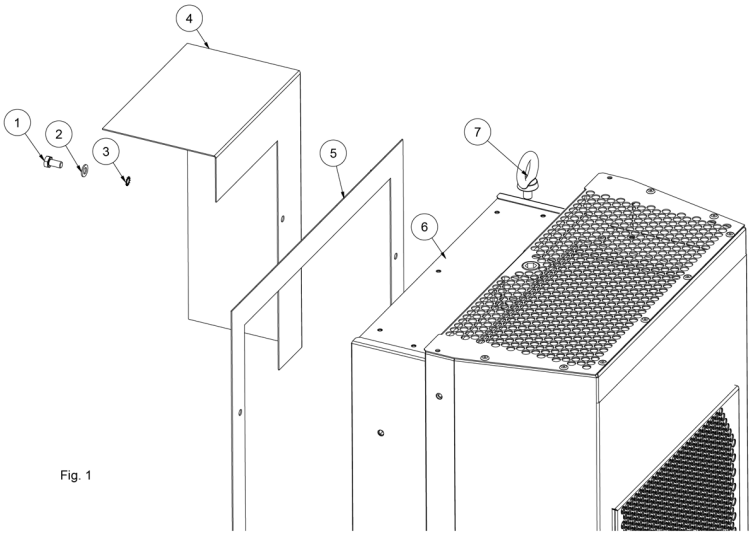

Fig. 1

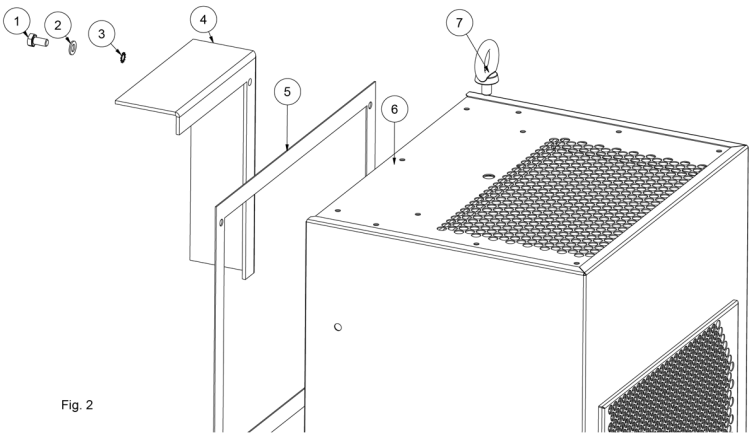

Fig. 2

10. Cut out dimensions

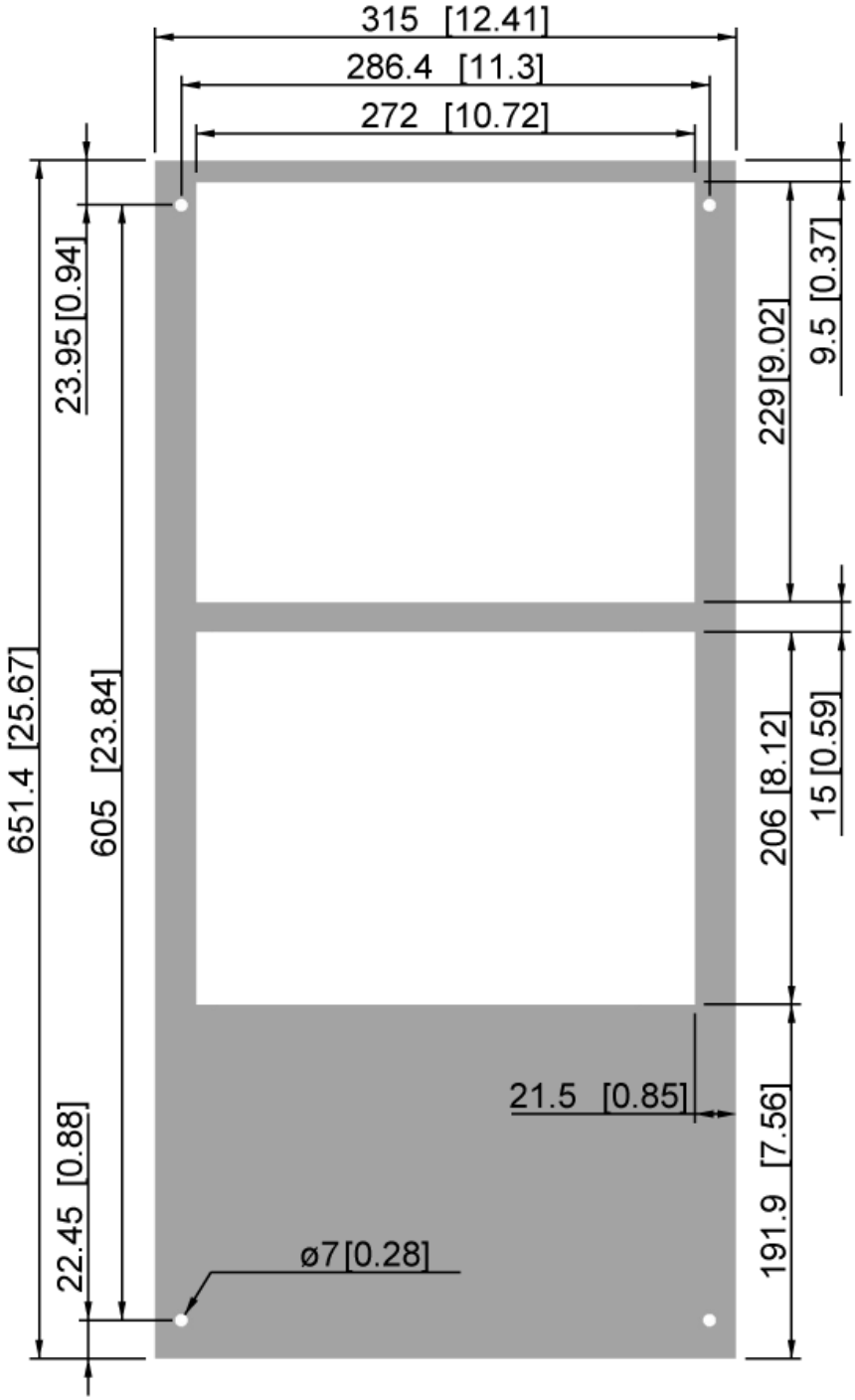

11. Dimensions (H x W x D)

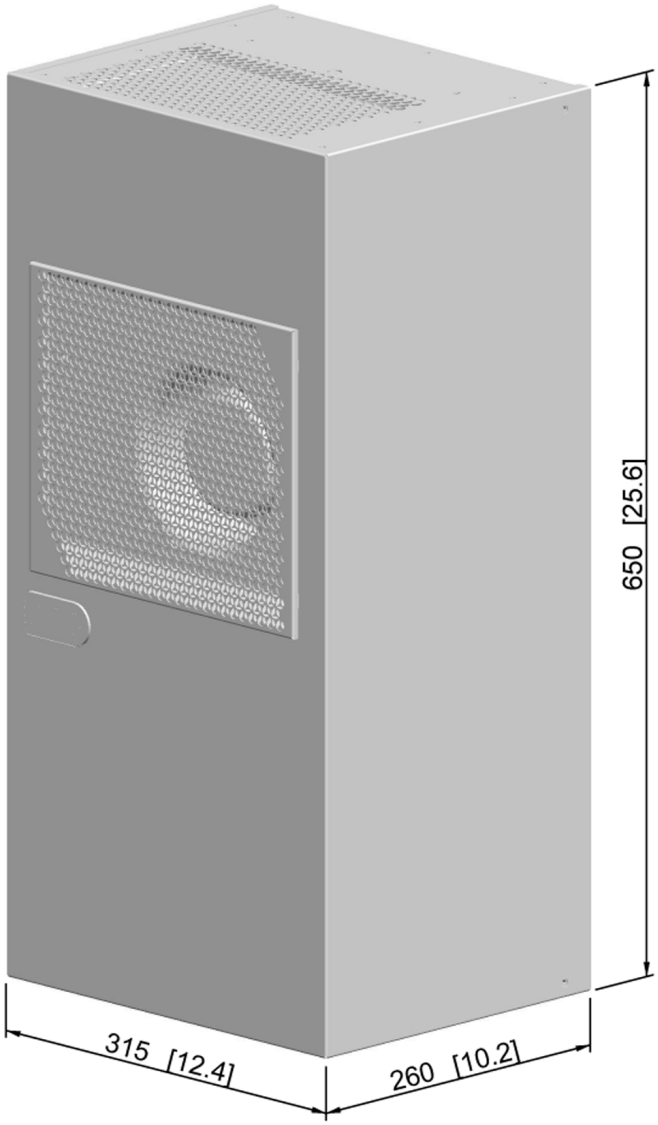

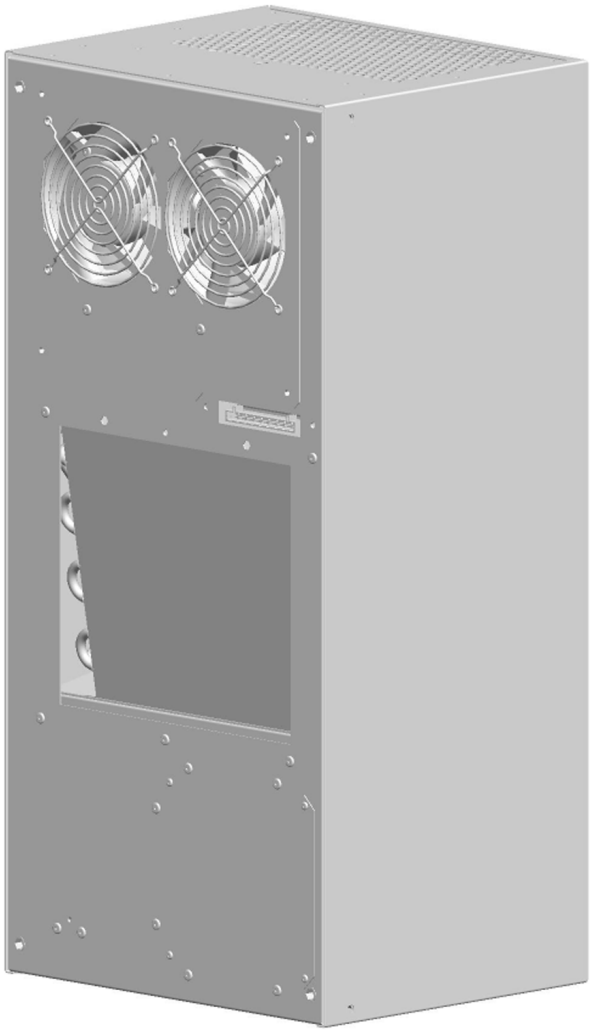

12. Electrical connection

Door Switch
The unit can be switched on and of via a door contact switch. When delivered the door contact terminals are bridged on the female connector. To connect the door contact switch remove the bridge and connect door contact switch. The contact must be closed when the cabinet door is closed.

Alarm Contacts

Alarm contacts rated according to:

EN60730-1	8(4)A N.O., 6(4)A N.C., 2(2)A N.O./ N.C. @ 250Vac	100000 cycles
UL 873	8A resistive 2FLA 12LRA, pilot duty C300 @ 250Vac	30000 cycles

These contacts are not suitable for fluorescent loads (neon lights, etc.) that use starters (ballasts) with phase shifting capacitors. Fluorescent lamps with electronic controllers or without phase shifting capacitors can be used, depending on the operating limits specified for each type of relay.

SCCR
Refer to UL508A Supplement SB and Seifert Systems' document Short Circuit Current Rating (SCCR) on methods how to modify the available short circuit current within a circuit in the panel.

13. Controller

The unit is equipped with a temperature controller which regulates the function of the air-conditioning cycle. At normal working conditions the display shows the temperature inside the enclosure. The cooling set point for the interior of the enclosure (parameter St / St1) is pre-set at 95°F and can be adjusted between 68°F and 122°F.

To change the cooling set point St/St1:

1. Press ‘Set’ till St/St1 appears on the display

2. Press the Up/Down buttons to adjust the temperature setting

3. Press ‘Set’ to save the new setting

To change the heating set point St2 (units with internal heater only):

1. Press ‘Set’ till St1 appears on the display and release the button

2. Press again ‘Set’ till St2 appears on the display

3. Press the Up/Down buttons to adjust the temperature

4. Press set to save the new setting

Important Note: when changing settings ensure that: (St2 + 5K) < St1

The unit also has a potential free high temperature alarm relay (normally closed configuration) that is pre-set to switch when the enclosure temperature exceeds 131°F. If necessary, the alarm relay configuration and the set point can be changed via the controller’s parameters. Kindly contact your nearest service / sales partner for further details on how to change these parameters.

14. Wiring diagram

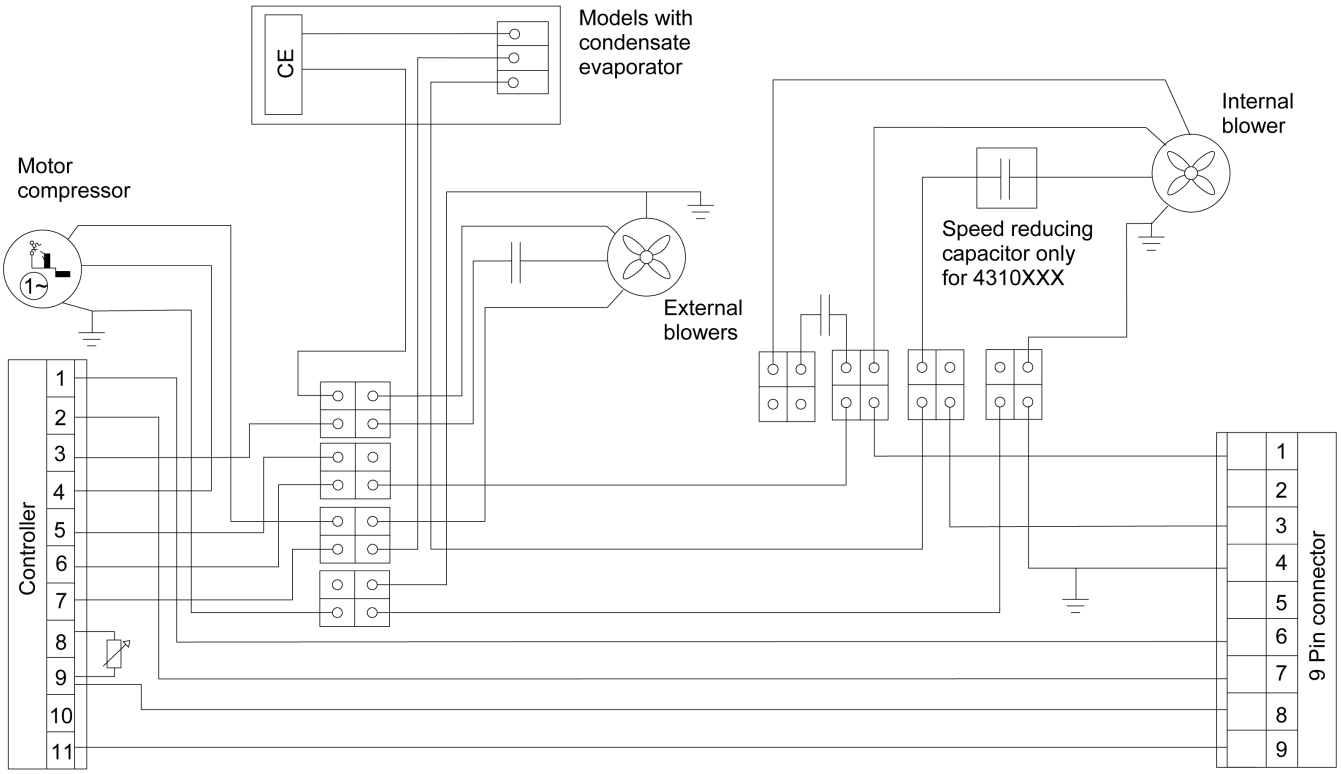

CE Condensate evaporator
1 Live
3 Neutral
4 Earth
6 Alarm P1
7 Alarm P2
8 Door T1
9 Door T2

5960019700/h

15. Taking into operation

Attention! The unit can be damaged by lack of lubricant. To ensure that the compressor is adequately lubricated the oil, which has been displaced during transport, must be allowed to flow back into it. The unit must therefore be allowed to stand for at least 30 min. before being connected to the mains and taken into operation. The unit / system must be protected with a MCB Type D or K.
Upon connection the internal fan will start working. If the temperature inside the enclosure is higher than the set value of the controller both the compressor and external air fan start working. Once the air inside the enclosure reaches the set temperature the compressor and external fan will stop.

The hysteresis is 3K, the minimum ON-time is 4 minutes, the minimum OFF-time is 3 minutes, for units with a cooling capacity of more than 1 kW is it usually 7 minutes.

The unit is pre-set at 95°F, which is suitable for most of the electronic devices.

16. Trouble shooting

Failure	Condition	Cause	Solution
Unit doesn't cool	Internal fan does not work	Power not connected.	Verify power supply
	Internal fan works, external fan and compressor don't work	Enclosure temperature is below setting temperature (**St1**)	Verify values of parameter "**St1**"
		Door switch contact is open	Verify door switch
		Controller doesn't work	Replace controller
	Internal fan works, external fan and compressor don't work. Display shows alternating OFF and temperature	The sequence of the phases inside the power supply connector is incorrect	Change phases inside power supply connector
Unit doesn't cool	External and internal fan work, compressor does not work	Compressor motor electrical failure	Have compressor replaced by qualified service technician
		Capacitor for compressor failed	Replace capacitor
	Compressor works, external fan doesn't work	External fan needs to be replaced	Replace external fan
Enclosure temperature too hot	Compressor and fans (external and internal) work all the time	Cooling unit undersized	Enclosure needs a cooling unit with with higher capacity
	Compressor and external fan work in alternating mode (ON / OFF)	Thermal compressor protector triggered	Verify if ambient temperature is too high,clean condenser
		Refrigerant leakage	Contact dealer/service center
Excessive condensate	Enclosure door open	Ambient air gets into the enclosure	Ensure door is closed, add a door switch and connect it to controller
	Enclosure door closed	Enclosure IP protection class is below IP54	Seal all openings of the enclosure
		Damaged or misplaced sealing strip	Repair sealing strip accordingly

17. Maintenance & Cleaning

Always switch power supply off before starting any maintenance on the unit.

The cooling unit is generally maintenance free and can be operated without filters in most environments. For units with filters these should be checked, cleaned and if necessary replaced on a regular basis. In addition the unit should have regular functional tests (approx. every 2,000 hours depending on the grade of ambient pollution).

Disposal
The unit contains R134a refrigerant and small quantities of lubricating oil. Replacement, repairs and final

disposal must be done according to the regulations of each country for these substances.

18. Transport & Storage

Malfunction due to transport damage
On delivery the carton box containing the unit must be examined for signs of transport damage. Any transport damage to the carton box could indicate that the unit itself has been damaged in transit which in the worst case could mean that the unit will not function.
The unit can only be stored in locations which meet the following conditions:

- temperature range: - 40°F to 158°F
- Relative humidity (at 77°F): max. 95 %

Returning the unit
To avoid transport damage the unit should be returned in the original packing or in a packing case and must be strapped to a pallet. If the unit cannot be returned in the original packing please ensure that:

- A space of at least 30 mm. must be maintained at all points between the unit and the external packing.
- The unit must be shipped in the same position as it was mounted.
- The unit must be protected by shock resistant padding (hard foam corner pieces, strips or cardboard corner pieces).

19. Parts supplied / Spare parts / Accessories

Description	QTY	Image
Instruction manual	1	
CE Declaration	1	
Mounting template	1	
M6 * 16 bolts	8	
A6.4 washer	8	
M6 toothed washers	8	
Lifting hook M18 x 12	1	
PVC washer	1	
Drain pipe	1	
Female connector	1	
Foam tape		

Accessories:

Description	Order no.
Fibre filter media EU2	SP-43040001-O-1
Washable aluminium filter	SP-43040001-BF-1
Stainless steel filter holder incl. filter media	SP-43040001-BG-1
Door contact switch	3100001

Seifert Systems GmbH
Albert-Einstein-Str. 3
42477 Radevormwald
Germany
Tel.+49 2195 68994-0
info.de@seifertsystems.com

Seifert Systems Ltd.
HF09/10
Hal-Far Industrial Estate
Birzebbuga, BBG 3000
Malta
Tel.+356 2220 7000
info@seifertsystems.com

Seifert Systems AG
Wilerstrasse 16
4563 Gerlafingen
Switzerland
Tel.+41 32 675 35 51
info.ch@seifertsystems.com

Seifert Systems GmbH
Bärnthal 1
4901 Ottnang
Austria
Tel.+43 7676 20712 0
info.at@seifertsystem.com

Seifert Systems Ltd.
Rep. Office
26100 Cremona
Italy
Tel.+39 349 259 4524
info@seifertsystems.com

Seifert Systems Inc.
75 Circuit Drive
North Kingstown
RI 02852
USA
Tel.+1 401-294-6960
info.us@seifertsystems.com

Seifert Systems Pty Ltd.
105 Lewis Road
Wantirna South
3152 Victoria
Australia
Tel.+61 3 98 01 19 06
info@seifertsystems.com.au